Epec 5050 Control Unit

Technical Document



© Epec Oy

DOCUMENT VERSION HISTORY

Date	Notes
03.11.2016	Added Ethernet to CODESYS 3.5 programmable versions
01.07.2015	First release

Epec Oy reserves all rights for improvements without prior notice

Epec Oy	Postiosoite/Postal address	Puhelin/Phone	Fax	Internet
Tiedekatu 6	PL/P.O.Box 194	+358-(0)20-7608 111	+358-(0)20-7608 110	www.epec.fi
FIN-60320 Seinäjoki	FIN-60101 Seinäjoki, Finland			

TABLE OF CONTENTS

1 PREFACE 5
1.1 Use of Symbols 5
1.2 Basic Skills Required 5
1.3 Safety Guidelines 6
1.4 Warranty 6
1.5 Limited Liability 7
1.6 Environmental Statement 7

2 PRODUCT OVERVIEW 8

3 TECHNICAL DATA 10

4 INPUT / OUTPUT SPECIFICATIONS 12
4.1 I/O List 12
4.2 Configurable I/Os 15
4.3 PWM Output / Digital Output / Digital Input 15
4.3.1 PWM/DO/DI_Type005 16
4.3.2 PWM/DO/DI_Type006 19
4.3.3 PWM/DO/DI/CM_Type007 21
4.3.4 PWM/DO/DI/CM_Type008 24
4.4 Digital Input / Pulse Input 27
4.4.1 DI/PI_Type001 27
4.4.2 DI/PI_Type002 29
4.4.3 DI/PI_Type003 30
4.4.4 Software Channels for Pulse Inputs 31
4.5 Analog Input / Digital Input 32
4.5.1 AI/DI_ Type076 32
4.6 Digital Output / GND 35
4.6.1 DO_GND/DI_Type010 35
4.7 Reference voltage supply pins 36
4.7.1 +5V REF_Type015 36
4.7.2 +10 V REF_Type004 37
4.8 Power supply pins and limitations 38
4.9 Connection Examples 42
4.9.1 Connection Examples for DI/PI_Type001 42
4.9.2 Connection Examples for DI/PI_Type002 44
4.9.3 Connection Examples for DI/PI_Type003 45
4.9.4 Connection Examples for PWM/DO/DI_Type005 47
4.9.5 Connection Examples for PWM/DO/DI_Type006 49
4.9.6 Connection Examples for PWM/DO/DI/CM_Type007 51
4.9.7 Connection Examples for PWM/DO/DI/CM/Type008 53
4.9.8 Connection Examples for DO/GND_Type010 55
4.9.9 Connection examples with external actuators 57

5 BUS CONNECTIONS 59
5.1 CAN Bus 59
5.2 Ethernet interface 60

6 INTERNAL DIAGNOSTICS 61
6.1 LED Indicator 61
6.2 Temperature Monitoring 62
6.3 Error Log 63

7 APPROVALS AND SAFETY 64
7.1 EMC Tests 64
7.2 Environmental Tests 69

8 MECHANICS AND CABLING 70
8.1 Unit Dimensions 70

Epec Oy reserves all rights for improvements without prior notice

8.2 Mounting and Cleaning 71
8.3 Plugging and unplugging the cables/connectors 73
8.4 Cabling 75
8.4.1 System Topologies 75
8.4.2 CAN Bus 77
8.4.3 I/O Cabling 79
8.4.4 Ethernet Cabling 83
8.4.5 Power Supply 84
8.5 Welding 88
8.6 System Examples 89
8.7 Accessories and Ordering Codes 91

Epec Oy reserves all rights for improvements without prior notice

1 PREFACE

1.1 Use of Symbols

This manual uses the following symbols to point out important information or safety instructions:



The information icon indicates important information and issues to be noted for the reader.



The caution icon indicates very important information or a warning. If the advices are ignored, it can result in personal injury or damage to software or equipment.



The (electrical) warning icon indicates a hazard which could cause an electrical danger and/or a personal injury.

This product uses the following symbols to point out important information or safety instructions:



CE compatibility
This symbol indicates that the product described in this manual complies with the requirements set in the CE Standard.



WEEE symbol
This symbol indicates that the product must be sent to separate collection facilities for recovery and recycling when the end-user wishes to discard the product.



E17 Approval
This product is certified with normal automotive (E17) EMC (electromagnetic compatibility) standards.

1.2 Basic Skills Required

The user of this document must have basic knowledge of machine controlling, CAN communication, PLCopen programming according to IEC61131-1 and should have skills to use CODESYS 2.3/3.5 programming environment.

Please refer to CODESYS 2.3/3.5 manual for further information concerning the programming environment and required installations.

Please refer to CAN and CANopen documentation from CAN in Automation (CiA) for further information on communication issues.

Epec Oy reserves all rights for improvements without prior notice

1.3 Safety Guidelines

The user of this documentation should follow general machine safety guidelines, directives and regulation appropriate to his/her country or market area.

A separate safety analysis is always recommended for the machine and its control system. The features of this product should be well documented in machine and control system documents so that the machine operator has the right information how to operate the machine correctly and safely.

This product is designed to be used only for machine controlling purposes. The manufacturer does not assume any responsibility for this product being fit for any particular application, unless otherwise expressly stated in writing by the manufacturer.

This product complies with those certifications and standards that are listed below. The manufacturer does not guarantee that this product complies any other certification, standard or test than listed below.

This product is not field serviceable, so it should not be opened at any situation.

External fuses should be installed for the product or the system power supply.

The system should be designed and constructed according to the Epec general mounting and cabling instruction document.

Epec Oy reserves a right to improve its products without a further notice.

1.4 Warranty

The manufacturer does not assume any responsibility for the products being fit for any particular purpose, unless otherwise expressly stated in writing by the manufacturer.

The manufacturer gives the warranty of twelve (12) months to the products and thereto related firmware from commissioning or eighteen (18) months from the date of delivery of the products which ever occurs first.

The manufacturer is during the warranty period responsible for defects in the products and thereto related firmware resulting from faults in material, design or workmanship. The manufacturer’s only obligation under this warranty is to, at its sole discretion, either to replace the products and/or thereto related firmware or to repair the defective products. The manufacturer shall, at its sole option, repair the products at its manufactory in Seinäjoki, Finland.

The warranty does not cover any costs related to removing or fastening of devices related to the products. Neither does the warranty cover the expenses of sending devices to or from the manufacturer for repairs. The warranty does not cover possible expenses relating to travelling, accommodation, daily benefits, etc. of installers.

The warranty becomes null and void if the buyer and/or a third party alters the products or the firmware in any way or if they are not used in accordance with the Manufacturer’s operating instructions.

All claims with respect to defects in the products shall be made to the manufacturer without delay and no later than on the seventh (7th) day after the defect has been or should have been discovered by the buyer. The manufacturer strives to reply to the claim in writing within two (2) weeks from the receipt of the claim. The buyer shall attach to the claim a possible error report or equivalent explanation of the grounds for the claim.

Epec Oy reserves all rights for improvements without prior notice

The manufacturer gives no other warranties whatsoever for the products than the warranty set out in this section and thus the warranty given in this section sets forth the warranty given by the manufacturer in its entirety.

1.5 Limited Liability

The manufacturer shall under no circumstances be liable for loss of production, loss of profit, loss of use or any other consequential damages and/or indirect losses, whatever their cause may be. In case claims based on product liability are brought against the Manufacturer for which claims the manufacturer may be liable, the manufacturer's liability is limited to the extent normally covered under normal product liability insurances.

The buyer shall compensate the manufacturer to the extent that the manufacturer might be liable to pay damages as a result of claims based on product liability according to paragraph above.

1.6 Environmental Statement

The manufacturer uses ISO14001 environmental certified processes and materials to manufacture products. The manufacturer undertakes to arrange for the recycling and scrapping of the products that are returned to the manufacturer by the buyer and/or the products that are received by the Manufacturer in connection with maintenance services performed as a result of that repairing of the products is deemed by the manufacturer to be inappropriate.

The manufacturer will charge a scrapping fee from the buyer according to the manufacturer's price list in force from time to time. No scrapping fee will, however, be charged for products that are received by the manufacturer during the warranty period.

WEEE
This product complies with the European Community Directive 2012/19/EU on waste electrical and electronic equipment (WEEE) encouraging and setting specific criteria for the collection, handling and recycling of electric and electronic waste.

RoHS
This product complies with the European Community Directive 2011/65/EU (RoHS) restricting hazardous substances such as quicksilver and lead in electrical and electronic equipment.

Epec Oy reserves all rights for improvements without prior notice

2 PRODUCT OVERVIEW





Epec 5050 Control Unit is a compact, powerful and robust multifunction controller with 32-bit processor and efficient calculating power. Epec 5000 product platform is fully compatible to the existing Epec product portfolio. Some of the advances of the Epec 5050 Control Unit are listed below.

Multifunctional Efficiency

- A powerful multifunction controller
  - 32-bit processor
  - increased calculating power
  - floating point calculation
- Can be used used in a CAN control unit system as a multifunction controller with different kinds of sensors and actuators, such as
  - proportional valves,
  - servo motors, and
  - electro-hydraulic components
- Provides control system solutions for both centralized and distributed intelligence systems
- Fully compatible with the existing Epec product portfolio

Mechanics & hardware

- Robust, light and leak proof aluminum/plastic cover has been widely tested against different chemicals and environmental conditions
- The shape of the casing works to protect the electronics inside against mechanical wear.
- Three point anchorage confirms firm mounting also on irregular surfaces
- Signal LED for quick status check and fault detection
- Equipped with gold plated, heavy duty AMPSEAL connectors
- Each connector is color coded and mechanically keyed to fit only to the correct, corresponding place
- One CAN is equipped with double pins, which makes cabling easier since there is no need for branches in the wire harness.
- Made in Finland

Epec Oy reserves all rights for improvements without prior notice

Versatile I/O capabilities

- Total of 65 I/O pins
- Most pins have multipurpose features
- All the I/O pins are equipped with a short-circuit protection
- Pulse inputs have a threshold voltage selection
- PWM outputs have a high side current measurement
- Some pins with an input feature have a programmable pull up / pull down selection

Application programming

- Application downloading is possible through both CAN bus and Ethernet
- Floating point calculation makes programming more efficient
- Epec products are based on PLCopen and CANopen®, which make them easily scalable to meet the requirements for both small and large machines
- Open I/O and communication interface, thus making it possible to connect
    - sensors
    - actuators
    - joysticks
    - other devices from other manufacturers to optimize the whole machine environment, both technically and ergonomically.
- Internal error logging which makes it possible to
    - save e.g. overvoltage and overtemperature alarms
    - program customized log applications

Epec Oy reserves all rights for improvements without prior notice

3 TECHNICAL DATA

Processor	32-bit CPU, 128 MHz
Memory	**4 MByte hardware version:** Flash 8 MByte (1 MByte for PLCopen application) RAM 4 MByte (256 kByte for PLCopen application variables) NVRAM 512 kByte (for error logs, system parameters) **8 MByte hardware version:** Flash 8 MByte (3 MByte for PLCopen application) RAM 8 MByte (1 MByte for PLCopen application variables) NVRAM 512 kByte (for error logs, system parameters)
Power	Nominal supply voltage 12/24 VDC systems (8,3 ... 36 VDC), Idle power consumption 2,2 W Undervoltage reset 7,5 V Control unit shut down voltage typical 43 V Overvoltage protection from 43 to 97,5 V
REF voltage outputs	+5 V, +10 V
Diagnostics	Signal LED (green/red) Temperature monitoring Error logging
Programming	4 MByte hardware version: CODESYS 2.3 / 3.5, Application size 1 MByte 8 MByte hardware version: CODESYS 2.3 / 3.5, Application size 3 MByte
Software installation	Download to flash memory via CAN1 or Ethernet
Protection class	IP67
Size / Outer dimensions	224,8 x 148,5 x 50 mm 8.819 x 5.827 x 1.969 in
Weight	0,95 kg 2.09 lbs
Case material	Aluminum / plastic
Operating temperature	-40... +85 °C -40...+185 °F
Storage temperature	-40... +85 °C -40...+185 °F
Connectors	3 x AMP35 (connector 1 grey, connector 2 black, connector 3 blue)
Communications/ Interfaces	4 x CAN 2.0 B, 1 x Ethernet
I/O pins total	65

Epec Oy reserves all rights for improvements without prior notice

Outputs	12	PWM/DO/DI with high side current measurement up to 2,5 A, PWM frequency adjustable by application
	8	PWM/DO/DI with high side current measurement up to 2,5 A, voltage measurement, PWM frequency by application
	4	PWM/DO/DI up to 2,5 A, PWM frequency by application, pull-up / pull-down selection by application
	4	PWM/DO/DI up to 4 A, PWM frequency by application, pull-up / pull-down selection by application
	4	DO/DI sinking up to 3 A
Inputs	11	DI/AI 0-10 V / 0-22 mA selection by application, pull-up/ pull-down selection by application 12 bit AD converter
	4	DI/PI 5/10 V, threshold selection by application, pull-up/pull-down selection by application
	14	DI/PI pull-up/pull-down selection by application
	4	DI/PI pull-down to GND

Epec Oy reserves all rights for improvements without prior notice

4 INPUT / OUTPUT SPECIFICATIONS

4.1 I/O List

The three connectors are placed in the module according to the following figure:

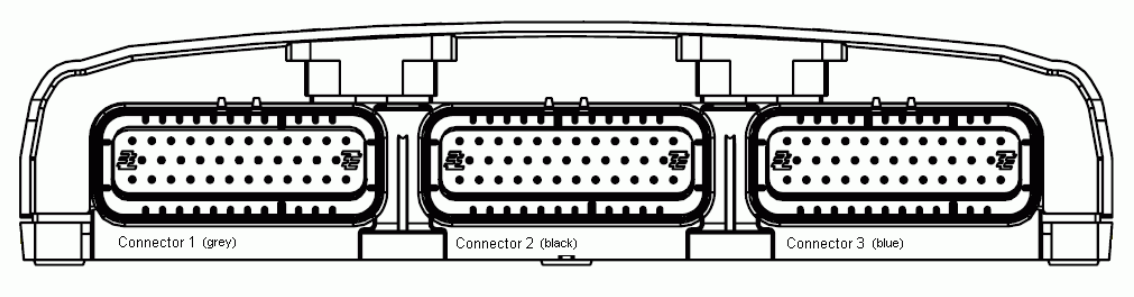

The following table lists the pins according to their pin number. Other columns offer quick information about the pin and links for more information.

The group column:

* **P1/P2** indicates the power source for the pin

smaller case characters indicate the input groups (the pins in the same group have the same configurations)

UPPER CASE CHARACTERS indicate the output groups (the pins in the same group have the same configurations)

I/O table

Pin number	Pin type	Details	Group*	Current / Voltage	Information
X1.2	CAN4H				
X1.3	CAN3H				
X1.4	CAN2H				
X1.5	CAN1H				
X1.6	CAN1H				
X1.7	CAN1H TERMINATOR				
X1.8	REF +10V_Type004	+10 V 250 mA			
X1.9	AI/DI_Type076	2,2 kΩ +10 V / 220 Ω GND / 47,5 kΩ GND		0..22 mA 0..10 V	
X1.10	AI/DI_Type076	2,2 kΩ +10 V / 220 Ω GND / 47,5 kΩ GND		0..22 mA 0..10 V	
X1.11	DI/PI_Type003	2,2 kΩ +10 V / 12,4 kΩ GND	a		Min input freq. configurable
X1.12	PWM/DO/DI/CM_Type007	12,4 kΩ GND	P1 / N	Nominal current 2,5 A	
X1.13	LOADER BSL	For factory use only			
X1.14	CAN4L				
X1.15	CAN3L				
X1.16	CAN2L				
X1.17	CAN1L				
X1.18	CAN1L				
X1.19	CAN1L TERMINATOR				

Epec Oy reserves all rights for improvements without prior notice

X1.20	AI/DI_Type076	2,2 kΩ +10 V / 220 Ω GND / 47,5 kΩ GND		0..22 mA 0..10 V	
X1.21	AI/DI_Type076	2,2 kΩ +10 V / 220 Ω GND / 47,5 kΩ GND		0..22 mA 0..10 V	
X1.22	PWM/DO/DI_Type005	2,2 kΩ +10 V / 12,4 kΩ GND	P1 / B	Nominal current 4 A	
X1.23	PWM/DO/DI/CM_Type007	12,4 kΩ GND	P1 / N	Nominal current 2,5 A	
X1.24	Logic Power Supply				
X1.25	ETHERNET TD+				
X1.26	ETHERNET TD-				
X1.27	ETHERNET RD+				
X1.28	ETHERNET RD-				
X1.29	PWM/DO/DI_Type006	2,2 kΩ +10 V / 12,4 kΩ GND	P1 / C	Nominal current 2,5 A	
X1.30	PWM/DO/DI_Type006	2,2 kΩ +10 V / 12,4 kΩ GND	P1 / C	Nominal current 2,5 A	
X1.31	PWM/DO/DI_Type006	2,2 kΩ +10 V / 12,4 kΩ GND	P1 / D	Nominal current 2,5 A	
X1.32	PWM/DO/DI_Type006	2,2 kΩ +10 V / 12,4 kΩ GND	P1 / D	Nominal current 2,5 A	
X1.33	PWM/DO/DI_Type005	2,2 kΩ +10 V / 12,4 kΩ GND	P1 / E	Nominal current 4 A	
X1.34	PWM/DO/DI_Type005	2,2 kΩ +10 V / 12,4 kΩ GND	P1 / E	Nominal current 4 A	
X1.35	PWM/DO/DI_Type005	2,2 kΩ +10 V / 12,4 kΩ GND	P1 / B	Nominal current 4 A	
X2.1	Power1 GND				
X2.2	Power1 GND				
X2.3	GND				
X2.4	REF +10V_Type004	+10 V 250 mA			
X2.5	REF +5V_Type015	+5 V 350 mA			
X2.6	DI/PI_Type001	2,2 kΩ +10 V / 12,4 kΩ GND	f	Thresh. 5 /10 V	
X2.7	DI/PI_Type001	2,2 kΩ +10 V / 12,4 kΩ GND	f	Thresh. 5 /10 V	
X2.8	DI/PI_Type001	2,2 kΩ +10 V / 12,4 kΩ GND	g	Thresh. 5 /10 V	
X2.9	DI/PI_Type001	2,2 kΩ +10 V / 12,4 kΩ GND	g	Thresh. 5 /10 V	
X2.10	GND				
X2.11	GND				
X2.12	GND				
X2.13	PWM/DO/DI/CM_Type007	12,4 kΩ GND	P1 / Q	Nominal current 2,5 A	
X2.14	PWM/DO/DI/CM_Type007	12,4 kΩ GND	P1 / Q	Nominal current 2,5 A	
X2.15	DI/PI_Type002	12,4 kΩ GND			
X2.16	DI/PI_Type003	2,2 kΩ +10 V / 12,4 kΩ GND	h		
X2.17	DI/PI_Type003	2,2 kΩ +10 V / 12,4 kΩ GND	h		
X2.18	DI/PI_Type002	12,4 kΩ GND			
X2.19	DI/PI_Type003	2,2 kΩ +10 V / 12,4 kΩ GND	i		

Epec Oy reserves all rights for improvements without prior notice

X2.20	DI/PI_Type003	2,2 kΩ +10 V / 12,4 kΩ GND	i		
X2.21	Reserved	For factory use only		0/4..20 mA	
X2.22	Reserved	For factory use only		0/4..20 mA	
X2.23	AI/DI_Type076	2,2 kΩ +10 V / 220 Ω GND / 47,5 kΩ GND		0/4..20 mA 0..10 V	
X2.24	Power1 Supply				
X2.25	Power1 Supply				
X2.26	DO_GNDType010	12,4 kΩ GND	P1	Nominal current 3 A	
X2.27	DO_GNDType010	12,4 kΩ GND	P1	Nominal current 3 A	
X2.28	PWM/DO/DI/CM_Type007	12,4 kΩ GND	P2 / O	Nominal current 2,5 A	
X2.29	PWM/DO/DI/CM_Type007	12,4 kΩ GND	P2 / O	Nominal current 2,5 A	
X2.30	PWM/DO/DI/CM_Type007	12,4 kΩ GND	P2 / R	Nominal current 2,5 A	
X2.31	PWM/DO/DI/CM_Type007	12,4 kΩ GND	P2 / R	Nominal current 2,5 A	
X2.32	PWM/DO/DI/CM_Type007	12,4 kΩ GND	P2 / T	Nominal current 2,5 A	
X2.33	PWM/DO/DI/CM_Type007	12,4 kΩ GND	P2 / T	Nominal current 2,5 A	
X2.34	DO_GNDType010	12,4 kΩ GND	P1	Nominal current 3 A	
X2.35	DO_GNDType010	12,4 kΩ GND	P1	Nominal current 3 A	
X3.1	Power2 GND				
X3.2	Power2 GND				
X3.3	GND				
X3.4	GND				
X3.5	DI/PI_Type003	2,2 kΩ +10 V / 12,4 kΩ GND	j		Min input freq. configurable
X3.6	DI/PI_Type003	2,2 kΩ +10 V / 12,4 kΩ GND	j		Min input freq. configurable
X3.7	DI/PI_Type002	12,4 kΩ GND			
X3.8	DI/PI_Type003	2,2 kΩ +10 V / 12,4 kΩ GND	k		Min input freq. configurable
X3.9	DI/PI_Type003	2,2 kΩ +10 V / 12,4 kΩ GND	k		Min input freq. configurable
X3.10	DI/PI_Type002	12,4 kΩ GND			
X3.11	DI/PI_Type003	2,2 kΩ +10 V / 12,4 kΩ GND	l		Min input freq. configurable
X3.12	DI/PI_Type003	2,2 kΩ +10 V / 12,4 kΩ GND	l		Min input freq. configurable
X3.13	REF +10V_Type004	+10 V 250 mA			
X3.14	AI/DI_Type076	2,2 kΩ +10 V / 220 Ω GND / 47,5 kΩ GND		0..22 mA 0..10 V	
X3.15	AI/DI_Type076	2,2 kΩ +10 V / 220 Ω GND / 47,5 kΩ GND		0..22 mA 0..10 V	
X3.16	AI/DI_Type076	2,2 kΩ +10 V / 220 Ω GND / 47,5 kΩ GND		0..22 mA 0..10 V	
X3.17	AI/DI_Type076	2,2 kΩ +10 V / 220 Ω GND / 47,5 kΩ GND		0..22 mA 0..10 V	
X3.18	AI/DI_Type076	2,2 kΩ +10 V / 220 Ω GND / 47,5 kΩ GND		0..22 mA 0..10 V	
X3.19	AI/DI_Type076	2,2 kΩ +10 V / 220 Ω GND / 47,5 kΩ GND		0..22 mA 0..10 V	

Epec Oy reserves all rights for improvements without prior notice

X3.20	REF +5V_Type015	+5 V 350 mA				
X3.21	DI/PI_Type003	2,2 kΩ +10 V / 12,4 kΩ GND	m			Min input freq. configurable
X3.22	DI/PI_Type003	2,2 kΩ +10 V / 12,4 kΩ GND	m			Min input freq. configurable
X3.23	DI/PI_Type003	2,2 kΩ +10 V / 12,4 kΩ GND	a			Min input freq. configurable
X3.24	Power2 Supply					
X3.25	Power2 Supply					
X3.26	PWM/DO/DI/CM_Type007	12,4 kΩ GND	P2 / S	Nominal current 2,5 A		
X3.27	PWM/DO/DI/CM_Type007	12,4 kΩ GND	P2 / S	Nominal current 2,5 A		
X3.28	PWM/DO/DI/CM_Type008	12,4 kΩ GND	P2 / U	Nominal current 2,5 A		
X3.29	PWM/DO/DI/CM_Type008	12,4 kΩ GND	P2 / U	Nominal current 2,5 A		
X3.30	PWM/DO/DI/CM_Type008	12,4 kΩ GND	P2 / X	Nominal current 2,5 A		
X3.31	PWM/DO/DI/CM_Type008	12,4 kΩ GND	P2 / X	Nominal current 2,5 A		
X3.32	PWM/DO/DI/CM_Type008	12,4 kΩ GND	P2 / V	Nominal current 2,5 A		
X3.33	PWM/DO/DI/CM_Type008	12,4 kΩ GND	P2 / V	Nominal current 2,5 A		
X3.34	PWM/DO/DI/CM_Type008	12,4 kΩ GND	P2 / Y	Nominal current 2,5 A		
X3.35	PWM/DO/DI/CM_Type008	12,4 kΩ GND	P2 / Y	Nominal current 2,5 A		

4.2 Configurable I/Os

Control unit contains inputs and outputs or, in other words, I/O pins of many different types. There are, for example, outputs which source current and outputs which sink current. Furthermore, there are I/O pins which can be used as inputs or as outputs at the control of the application programmer.

The following table contains a summary of configurable I/O pins in Epec 5050 control unit:

								DO		
Max Amount	**Pin type**	**Info**	**DI**	**AI**	**Current Measurement**	**Voltage Measurement**	**PI**	**PNP**	**NPN**	**PWM**
12	PWM/DO/DI/CM_Type007	2,5 A	x		x			x		x
8	PWM/DO/DI/CM_Type008	2,5 A	x		x	x		x		x
4	PWM/DO/DI_Type006	2,5 A	x					x		x
4	PWM/DO/DI_Type005	4 A	x					x		x
4	DO_GND_Type010	3 A	x						x	
11	AI/DI_Type076	0-10 V / 0-22 mA	x	x						
4	DI/PI_Type001	5 / 10 V pull-up/pull-down	x				x			
14	DI/PI_Type003	pull-up/pull-down	x				x			
4	DI/PI_Type002	pull-down	x				x			

4.3 PWM Output / Digital Output / Digital Input

This product has four different types of PWM/DO/DI pins. The following table shows their differences:

Epec Oy reserves all rights for improvements without prior notice

Pin type	Pull-up selection	2,5 A	4 A	Current Measurement	Voltage Measurement
PWM/DO/DI_Type005	X		X		
PWM/DO/DI_Type006	X	X			
PWM/DO/DI/CM_Type007		X		X	
PWM/DO/DI/CM_Type008		X		X	X

4.3.1 PWM/DO/DI_Type005



When using this type of pin, the related power switch must be switched on as well. See related power switches in section *I/O List* table's column named **Group**. Before the supply voltage can be connected to an output pin, the related power switch must be on. If the related power switch is off, the pin's input state is 1 (TRUE).

Output (PWM/DO)

- This kind of pin is a current sourcing output with a pull-up selection
  - In other words, the pin connects the load to a positive supply voltage
- When the pull-up is selected, it will affect two output pins (the pairs are indicated with upper case characters in the pin table's Group column in section Pinout Map).
  - This pull-up feature is for open load detection when the pin is used as an output.
- These outputs have a switching element called a smart FET. It has integrated features to protect itself and also the external pin, wiring and actuator.
- These outputs are capable of generating pulse width modulated (PWM) output signals.
- When used as an output, the input feature indicates the output FET's state



It is recommended to use the function blocks in *DigitalOutputDiagnostics* library to protect and diagnose outputs when used as digital outputs. For more information, refer to *Epec Programming and Libraries Manual*.

Input (DI)

- This pin can be used as a digital input (DI)
- A pin of this type can also be used as an input by using the output state monitoring feature.
  - In this case, the output functionality of the pin must be kept in the off state.
- It must be taken care in system design that the output unintentionally switching to on state causes no harm to the system.
- This pin can be used also with NPN-type sensors – sensors with open collector/open drain.

Electrical characteristics

Symbol	Parameter	Conditions	Min	Max	Units
V_{Level}	Output voltage	Output Off, Pull-up selected, Unconnected pin	typ. 8,3		V
I_o	Nominal Output Current	Output On (Note 7)	0	4	A
$I_{o\text{-}lim}$	Internal current limitation	Output On (Note 5, 9)	typ. 8		A

Epec Oy reserves all rights for improvements without prior notice

R_{PU}	Pull-up Resistance	Selectable pull-up (off/10 V)	typ. 2,2		kΩ
f_{PWM}	PWM Frequency	(Note 1)	10	3000	Hz
$Duty_{PWM}$	PWM Duty cycle	(Note 2, 10)	0 to 100		%
Res_{PWM}	PWM Resolution	(Note 3)	0,1		%
Digital status input					
R_I	Input Resistance	Output Off, Pull-up resistor not selected	typ. 12		kΩ
V_{IH}	Digital status input High Voltage level	Output Off (Note6)	3,2		V
V_{IL}	Digital status input Input Low Voltage	Output Off		1,9	V
$V_{I\text{-range}}$	Input voltage range	(Note 11)	-0,5	U_{in} + 0,2V	V
t_I	Digital Status Input Pulse Width	(Note 2, 4, 8)	> tC		ms
C_I	Input pin capacitance		typ. 1		nF

Note 1: The frequency of a (PWM) Pulse Width Modulation is = 1 / Period
Note 2: The duty cycle is defined as the percentage of digital 'high' to digital 'low' signals present during a PWM period.
Note 3: The PWM resolution is defined as the maximum number of pulses that you can pack into a PWM period.
Note 4: tC denotes the software cycle time.
Note 5: Current limit for short circuit protection to protect cabling and to limit internal power dissipation.
Note 6: Exceeding the max value might cause damage to input.
Note 7: The maximum output current depends on the load, PWM frequency and temperature.
Note 8: The pulse width must be greater that the software cycle time. For example with 50/50 pulse ratio, the pulse frequency is 1 / (2*pulse width)
Note 9: When the limit is exceeded, the output voltage circuit starts to limit the current by switching the output voltage. The switching does not effect the application software
Note 10: When the frequency increases, the actual duty cycle may be bigger than the value that has been set.
Note 11: Overload conditions

Epec Oy reserves all rights for improvements without prior notice

Functional block diagram

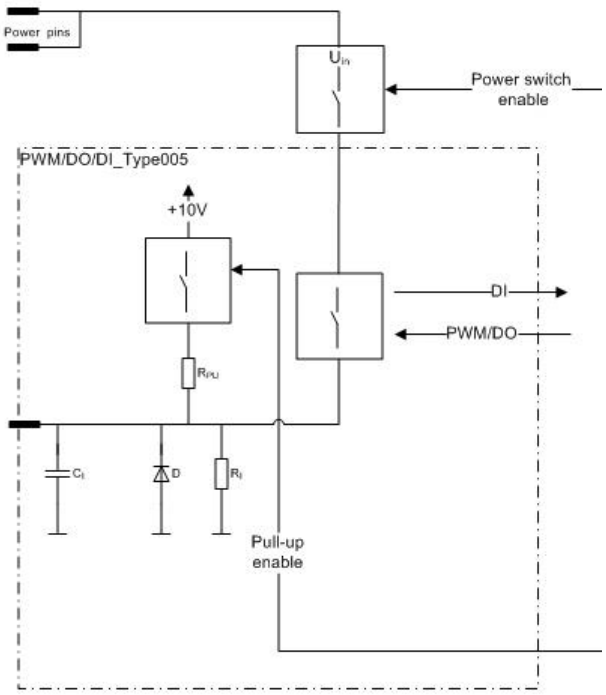

Refer to section Connection Examples to see examples of how to connect external actuators or sensors when using this type of pin.

Epec Oy reserves all rights for improvements without prior notice

4.3.2 PWM/DO/DI_Type006

When using this type of pin, the related power switch must be switched on as well. See related power switches in section *I/O List* table's column named **Group**. Before the supply voltage can be connected to an output pin, the related power switch must be on. If the related power switch is off, the pin's input state is 1 (TRUE).

Output (PWM/DO)

- This kind of pin is a current sourcing output with a pull-up selection
  - In other words, the pin connects the load to a positive supply voltage.
- When the pull-up is selected, it will affect two output pins (the pairs are indicated with upper case characters in the pin table's Group column in section Pinout Map).
  - This pull-up feature is for open load detection when the pin is used as an output.
- These outputs have a switching element called a smart FET. It has integrated features to protect itself and also the external pin, wiring and actuator.
- These outputs are capable of generating pulse width modulated (PWM) output signals.
- When used as an output, the input feature indicates the output FET's state

The FET outputs are grouped into pairs:

- The maximum continuous current for a single output in the pair is 2,5 A.
- The maximum continuous current for the pair is 4 A.

The pairs are indicated with upper case characters in the pin table's **Group** column in section *I/O List*

It is recommended to use the function blocks in *DigitalOutputDiagnostics* library to protect and diagnose outputs when used as digital outputs. For more information, refer to *Epec Programming and Libraries Manual*.

Input (DI)

- This pin can be used as a digital input (DI)
- A pin of this type can also be used as an input by using the output state monitoring feature.
  - In this case, the output functionality of the pin must be kept in the off state.
- It must be taken care in system design that the output unintentionally switching to on state causes no harm to the system.
- This pin can be used also with NPN-type sensors – sensors with open collector/open drain.

Epec Oy reserves all rights for improvements without prior notice

Electrical characteristics

Symbol	Parameter	Conditions	Min	Max	Units
V_{Level}	Output voltage	Output Off, Pull-up selected, Unconnected pin	typ. 8,3		V
I_o	Nominal Output Current	Output On (Note 7)	0	2,5	A
$I_{o\text{-}lim}$	Internal current limitation	Output On (Note 5, 9)	typ. 8		A
R_{PU}	Pull-up Resistance	Selectable pull-up (off/10 V)	typ. 2,2		kΩ
f_{PWM}	PWM Frequency	(Note 1)	10	3000	Hz
$Duty_{PWM}$	PWM Duty cycle	(Note 2, 10)	0 to 100		%
Res_{PWM}	PWM Resolution	(Note 3)	0,1		%
Digital status input					
R_I	Input Resistance	Output Off, Pull-up resistor not selected	typ. 13		kΩ
V_{IH}	Digital status input High Voltage level	Output Off (Note 6)	3,2		V
V_{IL}	Digital status input Input Low Voltage	Output Off		1,9	V
$V_{I\text{-}range}$	Input voltage range	(Note 11)	-0,5	U_{in} + 0,2V	V
t_I	Digital Status Input Pulse Width	(Note 2, 4, 8)	> tC		ms
C_I	Input pin capacitance		typ. 1		nF

Note 1: Frequency of a (PWM) Pulse Width Modulation is = 1 / Period
Note 2: The duty cycle is defined as the percentage of digital 'high' to digital 'low' signals present during a PWM period.
Note 3: The PWM resolution is defined as the maximum number of pulses that you can pack into a PWM period.
Note 4: tC denotes software cycle time.
Note 5: Current limit for short circuit protection to protect cabling and to limit internal power dissipation.
Note 6: Exceeding the max value might cause damage to input.
Note 7: The maximum output current depends on the load, PWM frequency and temperature.
Note 8: Pulse width must be greater that the software cycle time. For example with 50/50 pulse ratio, the pulse frequency is 1 / (2*pulse width)
Note 9: When the limit is exceeded, the output voltage circuit starts to limit the current by switching the output voltage. The switching does not affect the application software.
Note 10: When the frequency increases, the actual duty cycle may be bigger than the value that has been set.
Note 11: Overload conditions

Epec Oy reserves all rights for improvements without prior notice

Functional block diagram

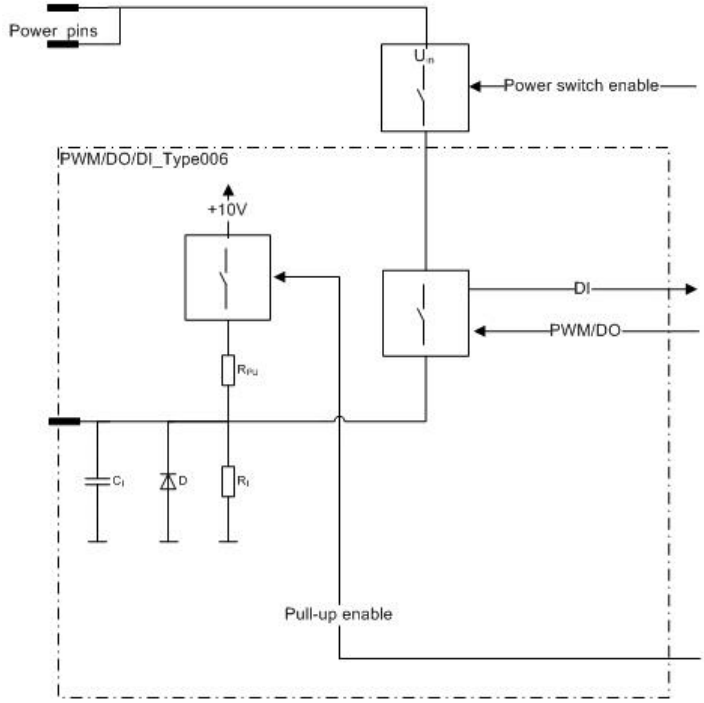

Refer to section Connection Examples to see examples of how to connect external actuators or sensors when using this type of pin.

4.3.3 PWM/DO/DI/CM_Type007

When using this type of pin, the related power switch must be switched on as well. See related power switches in section *I/O List* table's column named **Group**. Before the supply voltage can be connected to an output pin, the related power switch must be on. If the related power switch is off, the pin's input state is 1 (TRUE).

Output (PWM or DO)

- This type of pin is a current sourcing output with a current measurement feature (the pin connects the load to a positive supply voltage through the shunt resistors).
- These outputs have a switching element called a smart FET. It has integrated features to protect itself and also the external pin, wiring and actuator.
- These outputs are capable of generating pulse width modulated (PWM) output signals.
- When used as an output, the input feature indicates the output FET's state

The FET outputs are grouped into pairs:

- The maximum continuous current for a single output in the pair is 2,5 A.
- The maximum continuous current for the pair is 4 A.

The pairs are indicated with upper case characters in the pin table's **Group** column in section *I/O List*

It is recommended to use the function blocks in *DigitalOutputDiagnostics* library to protect and diagnose outputs when used as digital outputs. For more information, refer to *Epec Programming and Libraries Manual*.

Epec Oy reserves all rights for improvements without prior notice

Input (DI)

- This pin can be used as a digital input (DI)
- A pin of this type can also be used as an input by using the output state monitoring feature.
  - In this case, the output functionality of the pin must be kept in the off state.
- It must be taken care in system design that the output unintentionally switching to on state causes no harm to the system.

Current measurement

- When the pin is used as an output, the application can control the current with the current measurement feature
- The firmware limits the maximum current to 2,5 A (when the current exceeds the value more than 200 ms, the output is switched off)

Electrical characteristics

Symbol	Parameter	Conditions	Min	Max	Units
R_{Shunt}	Shunt resistance		typ. 68		mΩ
$I_{o\text{-}range}$	Nominal Current Measuring Range		0	3,5	A
$I_{acc\text{-}zero}$	Offset error	Calculated 'worst case'		+/-0,9	% (FS)
				+/-33,0	mA
$I_{acc\text{-}prop}$	Accuracy Proportional factor	Calculated 'worst case'		+/-3,2	% (FS)
				+/-117,0	mA
I_o	Nominal Output Current	Output On (Note 6, 9)	0	2,5	A
$I_{o\text{-}lim}$	Internal current limitation	Output On (Note 7)	0	2,5	A
f_{PWM}	PWM Frequency	In current measurement mode (Note 1)	50	200	Hz
		In PWM mode (Note 1)	10	3000	Hz
$Duty_{PWM}$	PWM Duty cycle	(Note 2, 10)	0 to 100		%
Res_{PWM}	PWM Resolution	(Note 3)	0,1		%
Digital status input					
R_I	Input Resistance	Output Off	typ. 13		kΩ
V_{IH}	Digital status input High Voltage level	Output Off (Note 5)	3,2		V
V_{IL}	Digital status input Input Low Voltage	Output Off		1,9	V
$V_{I\text{-}range}$	Input voltage range	(Note 11)	-0,5	U_{in} + 0,2V	V
t_I	Digital Status Input Pulse Width	(Note 2, 4, 8)	> tC		ms
C_I	Input pin capacitance		typ. 1		nF

Epec Oy reserves all rights for improvements without prior notice

Note 1: Frequency of a (PWM) Pulse Width Modulation is = 1 / Period
Note 2: The duty cycle is defined as the percentage of digital 'high' to digital 'low' signals present during a PWM period.
Note 3: The PWM resolution is defined as the maximum number of pulses that you can pack into a PWM period.
Note 4: tC denotes software cycle time.
Note 5: Exceeding the max value might cause damage to input.
Note 6: The maximum output current depends on the load, PWM frequency and temperature.
Note 7: The firmware limits the maximum current to 2,5 A. When the current exceeds the value more than 200 ms, the output is switched off. The current can be adjusted to be less than 2,5 A by software.
Note 8: Pulse width must be greater that the software cycle time. For example with 50/50 pulse ratio, the pulse frequency is 1 / (2*pulse width)
Note 9: When both outputs in the pair are used, the total power output can be up to 4A. For example if output1 continuous load is 2,5A then continuous max load for output2 is 4A – 2,5A = 1,5A.
Note 10: When the frequency increases, the actual duty cycle may be bigger than the value that has been set.
Note 11: Overload conditions

Functional block diagram

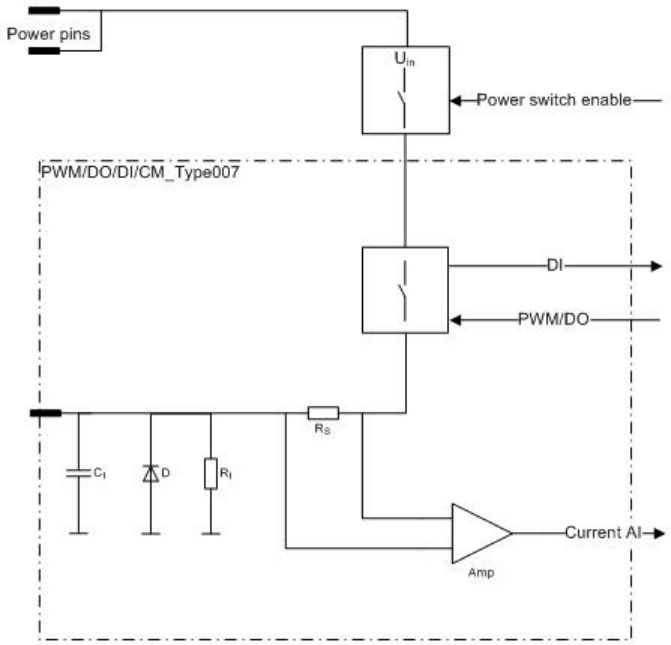

Refer to section Connection Examples to see examples of how to connect external actuators or sensors when using this type of pin.

Epec Oy reserves all rights for improvements without prior notice

4.3.4 PWM/DO/DI/CM_Type008



When using this type of pin, the related power switch must be switched on as well. See related power switches in section *I/O List* table's column named **Group**. Before the supply voltage can be connected to an output pin, the related power switch must be on. If the related power switch is off, the pin's input state is 1 (TRUE).

Output (PWM/DO)

- This type of pin is a current sourcing output with a current and voltage measurement features (the pin connects the load to a positive supply voltage through the shunt resistors).
- These outputs have a switching element called a smart FET. It has integrated features to protect itself and also the external pin, wiring and actuator.
- These outputs are capable of generating pulse width modulated (PWM) output signals.
- When used as an output, the input feature indicates the output FET's state



The FET outputs are grouped into pairs:

- The maximum continuous current for a single output in the pair is 2,5 A.
- The maximum continuous current for the pair is 4 A.

The pairs are indicated with upper case characters in the pin table's **Group** column in section *I/O List*



It is recommended to use the function blocks in *DigitalOutputDiagnostics* library to protect and diagnose outputs when used as digital outputs. For more information, refer to *Epec Programming and Libraries Manual*.

Input (DI/AI)

- This pin can be used as a digital input (DI)
- A pin of this type can also be used as an input by using the output state monitoring feature.
  - In this case, the output functionality of the pin must be kept in the off state.
- These pins may also be used as analog inputs (AI)
- It must be taken care in system design that the output unintentionally switching to on state causes no harm to the system.
- It's highly recommended to use closed loop connections when the output pin is used as an input. By keeping this simple principle in mind, will help avoid problems later on.

Voltage measurement

- When the pin is used as an output, the application can control the voltage with the voltage measurement feature
- When the pin is used as an input, the application can measure the input voltage level



The measured voltage must not exceed the operating voltage!

Current measurement

- When the pin is used as an output, the application can control the current with the current measurement feature
- The firmware limits the maximum current to 2,5 A (when the current exceeds the value more than 200 ms, the output is switched off)

Epec Oy reserves all rights for improvements without prior notice

Electrical characteristics

Symbol	Parameter	Conditions	Min	Max	Units
R_{Shunt}	Shunt resistance		typ. 68		mΩ
$I_{o\text{-}range}$	Nominal Current Measuring Range		0	3,5	A
$f_{Cut\text{-}Off}$	Cut-off frequency	Output current measuring	typ. 50		Hz
$I_{acc\text{-}zero}$	Offset error	Calculated 'worst case'		+/-0,9	%
				+/-33,0	mA
$I_{acc\text{-}prop}$	Accuracy Proportional factor	Calculated 'worst case'		+/-3,2	%
				+/- 117,7	mA (FS)
I_o	Nominal Output Current	Output On (Note 6, 8)	0	2,5	A
$I_{o\text{-}lim}$	Internal current limitation	Output On (Note 7)		2,5	A
f_{PWM}	PWM Frequency	In current measurement mode (Note 1)	50	200	Hz
		In PWM mode (Note 1)	10	3000	Hz
$Duty_{PWM}$	PWM Duty cycle	(Note 2, 9)	0 to 100		%
Res_{PWM}	PWM Resolution	(Note 3)	0,1		%
Digital status input					
R_I	Input Resistance	Output Off	Typ. 12		kΩ
V_{IH}	Digital status input High Voltage level	Output Off (Note 5) ks bl6	3,2		V
V_{IL}	Digital status input Input Low Voltage	Output Off		1,9	V
$V_{I\text{-}range}$	Input voltage range	(Note 12)	-0,5	U_{in} + 0,2V	V
t_I	Digital Status Input Pulse Width	(Note 2, 4, 11)	> tC		ms
C_I	Input pin capacitance		typ. 1		nF
Output/input voltage monitoring					
$V_{0\text{-}range}$	Nominal Output/input Voltage measuring range	(Note 10)	0	55	V
$V_{I\text{-}prop}$	Measuring accuracy Proportional factor	Calculated		+/-1	%
$V_{I\text{-}zero}$	Offset Error	Calculated		+/-0,1	%
				+/-55	mV

Epec Oy reserves all rights for improvements without prior notice

- **Note 1:** Frequency of a (PWM) Pulse Width Modulation is = 1 / Period
- **Note 2:** The duty cycle is defined as the percentage of digital 'high' to digital 'low' signals present during a PWM period.
- **Note 3:** The PWM resolution is defined as the maximum number of pulses that you can pack into a PWM period.
- **Note 4:** tC denotes software cycle time.
- **Note 5:** Exceeding the max value might cause damage to input.
- **Note 6:** The maximum output current depends on the load, PWM frequency and temperature.
- **Note 7:** The firmware limits the maximum current to 2,5 A. When the current exceeds the value more than 200 ms, the output is switched off. The current can be adjusted to be less than 2,5 A by software.
- **Note 8:** When both outputs in a same package are used the total power output can be up to 4A. For example if output1 continuous load is 2,5A then continuous max load for output2 is 4A – 2,5A = 1,5A.
- **Note 9:** When the frequency increases, the actual duty cycle may be bigger than the value that has been set.
  Note 10: The output must be kept in off state when used as an input. The measured voltage must not exceed the input voltage.
- **Note 11:** Pulse width must be greater that the software cycle time. For example with 50/50 pulse ratio, the pulse frequency is 1 / (2*pulse width)
- **Note 12:** Overload conditions

Functional block diagram

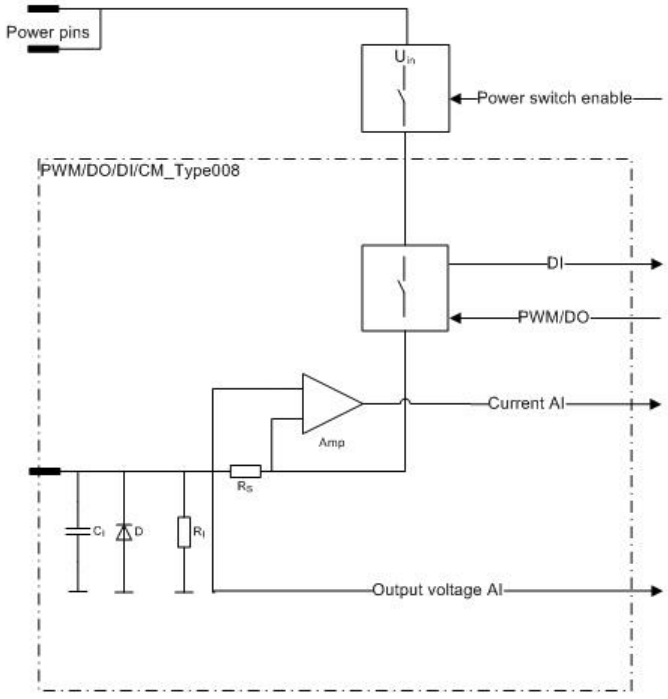

Other Information

Refer to section Connection Examples to see examples of how to connect external actuators or sensors when using this type of pin.

Epec Oy reserves all rights for improvements without prior notice

4.4 Digital Input / Pulse Input

This product has three different types of DI/PI pins. The following table shows their differences:

Pin type	Pull-up selection	Input voltage range selection
DI/PI_Type001	X	X
DI/PI_Type002		
DI/PI_Type003	X	

4.4.1 DI/PI_Type001

- This type of pin is a ground referenced input (DI) including a pulse counting (PI) feature.
- Pulse inputs can be used as a 1 or 2 channel pulse counter and they have a reset possibility. Possible software channels and pairs are listed in section SW channels for Pulse Inputs.
- The configurable features are controlled by two control signals:
  - pull-up enable selection
  - input voltage range selection
- When the pull-up to internal +10V is enabled, it controls two input pins as one. The pairs are indicated with lower case characters in the pin table's Group column in section Pinout Map.
- The input voltage range selection controls two input pins as one. This local signal defines threshold voltage levels for both inputs. This feature provides more flexibility to sensor connections. The pairs are indicated with lower case characters in the pin table's Group column in section Pinout Map.

Electrical characteristics

Symbol	Parameter	Conditions	Min	Max	Units
R_I	Input Resistance	Referenced to GND (Note 1)	typ. 12,4		kΩ
R_{PU}	Pull-up Resistance	Referenced to +10V (Note 2)	typ. 2,2		kΩ
V_{Level}	Output voltage	Unconnected pin, +10V_PU enabled (Note 2)	typ. 8,3		V
V_{IH}	Input High Voltage level	+10V range (Note 3)	7,0	50	V
V_{IL}	Input Low Voltage level	+10V range	0,0	5,0	V
V_{IH}	Input High Voltage level	+5V range (Note 3)	3,9	50	V
V_{IL}	Input Low Voltage level	+5V range	0,0	2,8	V
$V_{I\text{-}max}$	Max Input voltage	(Note 6)	-5	60	V
f_I	Input Frequency (normal digital input)	tC = 4 ms (Note 4, 5, 8, 9)		250	Hz
	Input Frequency (pulse input mode)	(Note 7, 10)	5	20000	Hz
t_I	Input Pulse Width (pulse counting)	(Note 7)	0,025	250	ms
C_I	Input pin capacitance		typ. 1		nF

Note 1: A pull-up resistor is not selected.
Note 2: When pull-up resistor is selected.
Note 3: Exceeding the max values might cause damage to input.

Epec Oy reserves all rights for improvements without prior notice

Note 4: These parameters depend on software cycle time.
Note 5: Applies to inputs used as normal digital input. Violating this rating may lead to application program not noticing all input state transitions.
Note 6: Overload conditions.
Note 7: Violating this rating may lead to system not recognizing all input state transitions.
Note 8: Pulse width must be greater that the software cycle time. For example with 50/50 pulse ratio, the pulse frequency is 1 / (2*pulse width)
Note 9: tC denotes software cycle time.
Note10: Max value can be reached by 2-98% pulse ration.

Functional block diagram

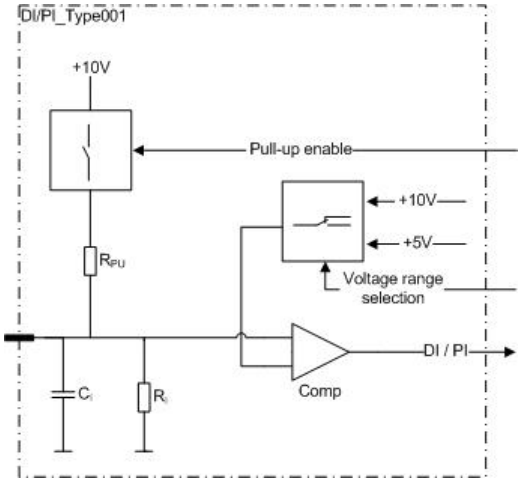

Other Information

Refer to section Connection Examples to see examples of how to connect external actuators or sensors when using this type of pin.

Epec Oy reserves all rights for improvements without prior notice

4.4.2 DI/PI_Type002

- This type of pin is a ground referenced input (DI) including a pulse counting (PI) feature.
- Pulse inputs can be used as a 1 or 2 channel pulse counter and they have a reset possibility. Possible software channels and pairs are listed in section SW channels for Pulse Inputs.
- This type of pin has no configurable features

Electrical characteristics

Symbol	*Parameter*	*Conditions*	*Min*	*Max*	*Units*
R_I	Input Resistance		typ. 12,4		kΩ
V_{IH}	Input High Voltage level	(Note 1)	6,2	50	V
V_{IL}	Input Low Voltage level		0,0	4,1	V
V_{I-max}	Max Input voltage	(Note 6)	-5	60	V
f_I	Input Frequency (normal digital input)	tC= 4ms (Note 2,3,4,7)		250	Hz
	Input Frequency (pulse counting)	(Note 5,8)	5	20000	Hz
t_I	Input Pulse Width (pulse counting)	(Note 5)	0,025	250	ms
C_I	Input pin capacitance		typ. 1		nF

Note 1: Exceeding the max values might cause damage to input.
Note 2: These parameters depend on software cycle time.
Note 3: Applies to inputs used as normal digital input. Violating this rating may lead to application program not noticing all input state transitions.
Note 4: Pulse width must be greater that the software cycle time. For example with 50/50 pulse ratio, the pulse frequency is 1 / (2*pulse width)
Note 5: Violating this rating may lead to system not recognizing all input state transitions.
Note 6: Overload conditions.
Note 7: tC denotes software cycle time.
Note 8: Max value can be reached by 2-98% pulse ration.

Functional block diagram

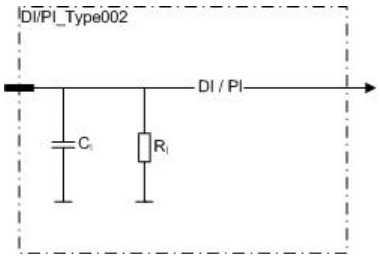

Other Information

Refer to section Connection Examples to see examples of how to connect external actuators or sensors when using this type of pin.

Epec Oy reserves all rights for improvements without prior notice

4.4.3 DI/PI_Type003

- This type of pin is a ground referenced input (DI) including a pulse counting (PI) feature.
- Pulse inputs can be used as a 1 or 2 channel pulse counter and they have a reset possibility. Possible software channels and pairs are listed in section SW channels for Pulse Inputs.
- The configurable features are controlled by a control signal:
  - pull-up enable selection
- When the pull-up to internal +10V is enabled, it controls two input pins as one. The pairs are indicated with lower case characters in the pin table's Group column in section Pinout Map.

Electrical characteristics

Symbol	Parameter	Conditions	Min	Max	Units
R_I	Input Resistance	Referenced to GND (Note 1)	typ. 12,4		kΩ
R_{PU}	Pull-up Resistance	Referenced to +10V (Note 2)	typ. 2,2		kΩ
V_{Level}	Output voltage	Unconnected pin, +10_PU enabled (Note 2)	typ. 8,3		V
V_{IH}	Input High Voltage level	(Note 3)	6,2	50	V
V_{IL}	Input Low Voltage level		0,0	4,1	V
V_{I-max}	Max Input voltage	(Note 6)	-5	60	V
f_I	Input Frequency (normal digital input)	tC= 4ms (Note 4,5,9)		250	Hz
	Input Frequency (pulse counting)	(Note 7,8,10)	5	20000	Hz
t_I	Input Pulse Width (pulse counting)	(Note 7)	0,025	250	ms
C_I	Input pin capacitance		typ. 1		nF

Note 1: A pull-up resistor is not selected.
Note 2: When pull-up resistor is selected.
Note 3: Exceeding the max values might cause damage to input.
Note 4: These parameters depend on software cycle time.
Note 5: Applies to inputs used as normal digital input. Violating this rating may lead to application program not noticing all input state transitions.
Note 6: Overload conditions
Note 7: Violating this rating may lead to system not recognizing all input state transitions.
Note 8: It is possible to configure a smaller minimum frequency for some of the pins, see I/O table (Information column) in section I/O List.
Note 9: tC denotes software cycle time.
Note10: Max value can be reached by 2-98% pulse ration.

Epec Oy reserves all rights for improvements without prior notice

Functional block diagram

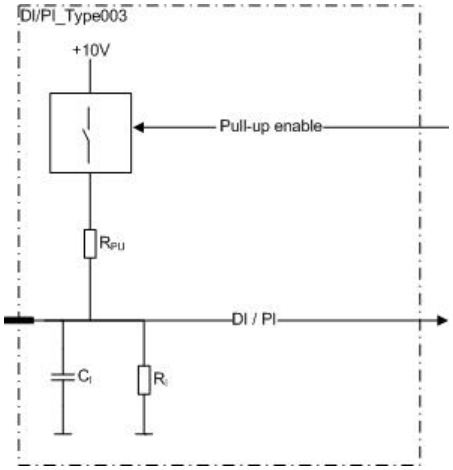

Other Information

Refer to section Connection Examples to see examples of how to connect external actuators or sensors when using this type of pin.

4.4.4 Software Channels for Pulse Inputs

Possible software channels for pulse inputs are listed in the following table according to how many channels are needed and if a possibility for a reset is required.

If there is no need for the reset functionality, reserve the pins from the bottom end. This way the pins with the reset possibility remain free for possible future use.

Pin	Possible SW Channels when 1 channel is needed with no reset	Possible SW Channel pairs when 2 channels is needed with no reset	Possible SW Channels when 1 channel is needed with a reset	Possible SW Channels when 2-channel pulse input is needed with a reset
X2.06	1	pair 1	channel A	channel A
X2.07	2		reset pin for the channel above	channel B
X2.08	3	pair 2	channel A	reset pin for the channel pair above
X2.09	4		reset pin for the channel above	channel A
X2.15	5	pair 3	channel A	channel B
X2.18	6		reset pin for the channel above	reset pin for the channel pair above
X3.07	7	pair 4	channel A	channel A
X3.10	8		reset pin for the channel above	channel B
X2.16	9	pair 5	channel A	reset pin for the channel pair above
X2.17	10		reset pin for the channel above	channel A
X2.19	11	pair 6	channel A	channel B
X2.20	12		reset pin for the channel above	reset pin for the channel pair above
X3.08	13	pair 7	not supported	not supported

Epec Oy reserves all rights for improvements without prior notice

X3.09	14		not supported	not supported
X3.11	15	pair 8	not supported	not supported
X3.12	16		not supported	not supported
X3.05	17	pair 9	not supported	not supported
X3.06	18		not supported	not supported
X3.21	19	pair 10	not supported	not supported
X3.22	20		not supported	not supported
X3.23	21	pair 11	not supported	not supported
X1.11	22		not supported	not supported

4.5 Analog Input / Digital Input

4.5.1 AI/DI_ Type076

- This type of pin is an analog input and a digital input
- The configurable features are controlled by two control signals:
  - One control signal is for selecting:
    - Voltage mode: High impedance input for signal from 0 to 10V with or without pull-up.
    - Current mode: Low impedance input for signal from 0 to 22mA.
  - One control signal is for selecting (when in voltage mode):
    - Pull-up mode to +10V by a resistor
    - Pull-up mode to GND by a resistor



Configure the pin to current mode before applying the current signal.



When measuring current (mA), the sensor connected to 5050 unit's AI/DI pin must not be powered up before the 5050 control unit is operational. Otherwise the sensor's input signal is not received correctly.



When configured to current mode, analog inputs can be protected against overvoltage by using function *AI_InputProtection* in *5050int* programming library. For more information, refer to *Epec Programming and Libraries Manual*.

Epec Oy reserves all rights for improvements without prior notice

Electrical characteristics

Symbol	Parameter	Conditions	Min	Max	Units
V_I	Input Voltage measuring range	Voltage mode	0,0	10,0	V
V_{PU}	Pull-up voltage	(Note 1)	typ. 10		V
V_{I-PU}	Pull-up Voltage measuring range	Voltage mode	0,0	10,0	V
I_I	Input Current measuring range	Current mode	0,0	22,7	mA
R_I	Input Resistance	Voltage mode (Note 2)	typ. 47,5		kΩ
		Current mode (Note 2)	typ. 220		Ω
R_{PU}	Pull-up Resistance		typ. 2,2		kΩ
t_I	Time Constant of Input Low Pass Filter	Voltage mode	typ. 0,78		ms
		Current mode	typ. 1,55		ms
$t_{I-pull-up}$	Time Constant of Pull-up Low Pass Filter	Pull-up voltage measuring	typ. 0,78		ms
V_{I-prop}	Input Measuring accuracy Proportional factor	Calculated (Note 4)		+/-1	%
$V_{I-prop-PU}$	Pull-up Voltage Measuring accuracy Proportional factor	Calculated (Note 4)		+/-1	%
V_{I-zero}	Offset Error	Voltage mode		+/- 0,1	%
		Calculated (Note 4)		+/-10	mV
		Current mode Calculated (Note 4)		+/-0,022	mA
C_I	Input pin capacitance		typ. 1		nF
V_{I-max}	Max Input voltage	Voltage mode Overload conditions (Note 3)	-5	50	V
		Current mode Overload conditions (Note 3)	-5	15	V

Note 1: Temperature-dependent.
Note 2: Referenced to GND.
Note 3: Exceeding the max value might cause damage to input.
Note 4: Calculated theoretical maximum values based on component tolerances.

Epec Oy reserves all rights for improvements without prior notice

Functional block diagram

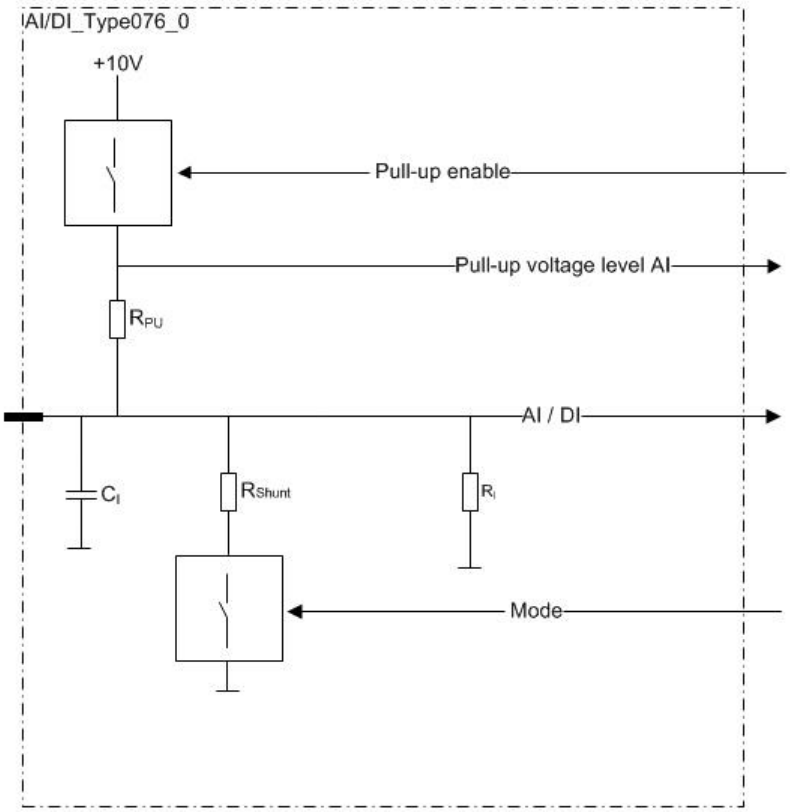

Other Information

Refer to section Connection Examples to see examples of how to connect external actuators or sensors when using this type of pin.

Epec Oy reserves all rights for improvements without prior notice

4.6 Digital Output / GND

4.6.1 DO_GND/DI_Type010



When using this type of pin, the related power switch must be switched on as well. See related power switches in section *I/O List* table's column named **Group**. Before the supply voltage can be connected to an output pin, the related power switch must be on. If the related power switch is off, the pin's input state is 1 (TRUE).

Output

- This type of pin is a current sinking output
  - In other words, this type of output connects the loads to the ground (GND) and simultaneously the state of the output can be monitored with an input.



It is recommended to use the function blocks in *DigitalOutputDiagnostics* library to protect and diagnose outputs when used as digital outputs. For more information, refer to *Epec Programming and Libraries Manual*.

Input

- This type of pin can also be used as an input
  - In this case, the output functionality of the pin must be kept in the off state.
- It must be taken care in system design that the output unintentionally switching to on state causes no harm to the system.

Electrical characteristics

Symbol	Parameter	Conditions	Min	Max	Units
R_{ON}	On-resistance	Output On		250	mΩ
I_I	Nominal Input Current	Output On, VDC_{LOAD} < max $V_{I\text{-}range}$ (Note 1)	0	3	A
Digital status input					
R_I	Input Resistance	Output Off	typ. 12,4		kΩ
V_{IH}	Digital status input High Voltage level	Output Off (Note 2)	3,2		V
V_{IL}	Digital status input Low Voltage level	Output Off		1,4	V
$V_{I\text{-}range}$	Input voltage range	(Note 2)	-0,5	U_{in} + 0,2V	V
$t_{I\text{-}status}$	Time Constant of Status Low Pass Filter	Output Off	typ. 1,55		ms
C_I	Input Capacitance		typ. 1		nF

Note 1: Parameter is defined by resistive load.
Note 2: Exceeding the max value might cause damage to input.

Epec Oy reserves all rights for improvements without prior notice

Functional block diagram

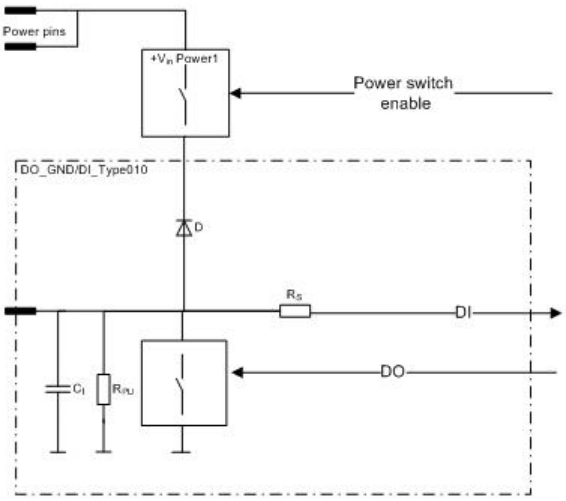

Other Information

Refer to section Connection Examples to see examples of how to connect external actuators or sensors when using this type of pin.

4.7 Reference voltage supply pins

4.7.1 +5V REF_Type015

- This is an internally regulated and monitored reference voltage supply for external devices.
- This reference output can be switched on/off by application.

Overload protection
If the output current exceeds the nominal output current, then the output voltage is less than the specified voltage level.

Voltage monitoring
The level of the output voltage can be monitored by application.

Electrical characteristics

Symbol	Parameter	Conditions	Min	Max	Units
V_{oLevel}	Output voltage	Output On, Unconnected pins	typ. 5,0		V
I_o	Nominal Output Current	Output On, U_{in} = 8,3 - 36 V V_{oLevel} ≥ 4,75	0	350	mA
C_o	Output Capacitance	On each pin	typ. 47		nF
V_{I-max}	Max Input voltage	Overload conditions (Note 1)	-0,5	50	V
Voltage monitoring					
$V_{o-range}$	Nominal Voltage measuring range		0	28,5	V
V_{o-prop}	Measuring accuracy Proportional factor	Calculated		+/-1	%
V_{o-zero}	Offset Error	Calculated		+/-0,1	%
				+/- 28,5	mV

Epec Oy reserves all rights for improvements without prior notice

Note 1: When output voltage is under overload conditions, for example, short circuit to supply voltages. Exceeding the max value might cause damage to output.

Functional block diagram

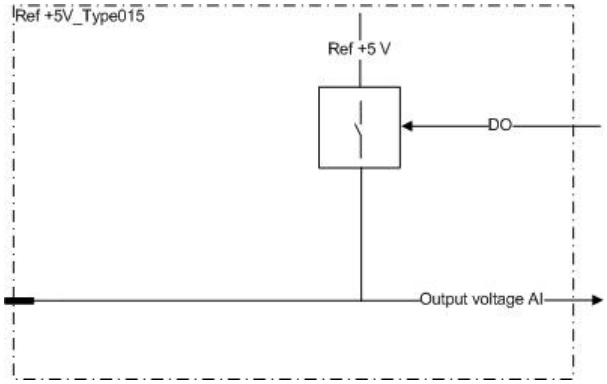

4.7.2 +10 V REF_Type004

- This is an internally regulated and monitored reference voltage supply for external devices.
- This reference output can be switched on/off by application.

Overload protection
If the output current exceeds the nominal output current, then the output voltage is less than the specified voltage level.

Voltage monitoring
The level of the output voltage can be monitored by application.

Electrical characteristics

Symbol	Parameter	Conditions	Min	Max	Units
V_{oLevel}	Output voltage	Output On, Unconnected pins	typ. 10,0		V
I_o	Nominal Output Current	Output On, U_{in} = 8,3 - 36 V V_{oLevel} ≥ 9,75	0	250	mA
C_o	Output Capacitance	On each pin	typ. 47		nF
V_{I-max}	Max Input voltage	Overload conditions (Note 1)	-0,5	50	V
Voltage monitoring					
$V_{o-range}$	Nominal Voltage measuring range		0	28,5	V
V_{o-prop}	Measuring accuracy Proportional factor	Calculated		+/-1	%
V_{o-zero}	Offset Error	Calculated		+/-0,1	%
				+/- 28,5	mV

Note 1: When output voltage is under overload conditions, for example, short circuit to supply voltages. Exceeding the max value might cause damage to output.

Epec Oy reserves all rights for improvements without prior notice

Functional block diagram

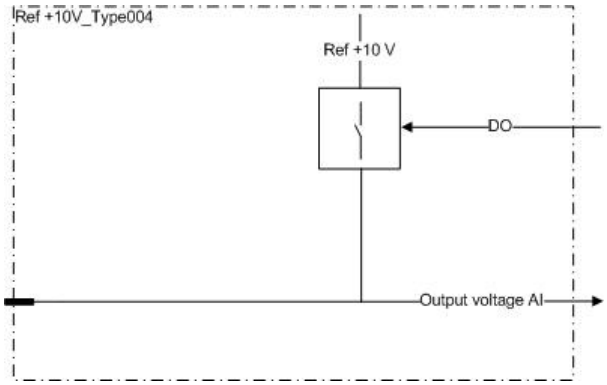

4.8 Power supply pins and limitations

Power supply pins are located in the following pins:

Connector pin number	Pin Name	Current / Pin	Note
X1.1	LOGIC GND		
X1.24	Power Supply Logic		
X2.1	Power1 GND	10 A	The maximum sum of GND pin currents should not continuously exceed 20 A.
X2.2	Power1 GND	10 A	
X2.24	Power Supply1	10 A	The maximum sum of supply pin currents cannot exceed 14 A.
X2.25	Power Supply1	10 A	
X3.1	Power2 GND	10 A	The maximum sum of GND pin currents should not continuously exceed 20 A.
X3.2	Power2 GND	10 A	
X3.24	Power Supply2	10 A	The maximum sum of supply pin currents should not continuously exceed 14 A.
X3.25	Power Supply2	10 A	
X2.5	+5 V REF		
X3.20	+5 V REF		
X1.8	+10 V REF		
X2.4	+10 V REF		
X3.13	+10 V REF		

Epec Oy reserves all rights for improvements without prior notice

The following table describes which power gives certain pins the currency needed:

Connector pin number	Pin Type	Powered by	Current/ voltage
X1.12	PWM/DO/DI/CM	Power 1	2A
X1.22	PWM/DO/DI	Power 1	4A
X1.23	PWM/DO/DI/CM	Power 1	2A
X1.29	PWM/DO/DI	Power 1	2A
X1.30	PWM/DO/DI	Power 1	2A
X1.31	PWM/DO/DI	Power 1	2A
X1.32	PWM/DO/DI	Power 1	2A
X1.33	PWM/DO/DI	Power 1	4A
X1.34	PWM/DO/DI	Power 1	4A
X1.35	PWM/DO/DI	Power 1	4A
X2.13	PWM/DO/DI/CM	Power 1	2A
X2.14	PWM/DO/DI/CM	Power 1	2A
X2.26	DO_GND	Power 1	3A
X2.27	DO_GND	Power 1	3A
X2.34	DO_GND	Power 1	3A
X2.35	DO_GND	Power 1	3A
X2.28	PWM/DO/DI/CM	Power 2	2A
X2.29	PWM/DO/DI/CM	Power 2	2A
X2.30	PWM/DO/DI/CM	Power 2	2A
X2.31	PWM/DO/DI/CM	Power 2	2A
X2.32	PWM/DO/DI/CM	Power 2	2A
X2.33	PWM/DO/DI/CM	Power 2	2A
X3.26	PWM/DO/DI/CM	Power 2	2A
X3.27	PWM/DO/DI/CM	Power 2	2A
X3.28	PWM/DO/DI/CM	Power 2	2A
X3.29	PWM/DO/DI/CM	Power 2	2A
X3.30	PWM/DO/DI/CM	Power 2	2A
X3.31	PWM/DO/DI/CM	Power 2	2A
X3.32	PWM/DO/DI/CM	Power 2	2A
X3.33	PWM/DO/DI/CM	Power 2	2A
X3.34	PWM/DO/DI/CM	Power 2	2A
X3.35	PWM/DO/DI/CM	Power 2	2A

Epec Oy reserves all rights for improvements without prior notice

Connector pin number	Current / Pin	Note
X2.3	10 A	The maximum sum of GND pin currents cannot exceed 28 A.
X2.10	10 A	
X2.11	10 A	
X2.12	10 A	
X3.3	10 A	
X3.4	10 A	



If the Logic power is >43 V, there is a risk that the control unit shuts down.

If Power1 or Power2 is > 43 V, the outputs in the group must be disabled.

Epec Oy reserves all rights for improvements without prior notice

Electrical characteristics

Symbol	Parameter	Conditions	Min	Max	Units
V_I	Nominal Input voltage		8,3	36	V
P_{Logic}	Logic Power Consumption	No external loads, U_{in} = 24V	typ. 2,2		W
$I_{TOT-max}$	Max Total Current output	Power groups together		28	A
$I_{PIN-max}$	Max through current per pin	T_{amb} ≤ 85°C	typ. 12,5		A
$V_{I-Load-dump}$	Max Input transient Voltage level	(Note 1)	97,5		V
V_{I-max}	Max Continuous Input Voltage level	Each power group (Note 2)	-58	60	V
$V_{OVP-Reg}$	Regulated Overvoltage threshold level		typ. 43		V
$V_{OVP-oper.}$	Operational Overvoltage level	(Note 3,4)		50	V
V_{UVP}	Undervoltage threshold level		typ. 7,5		V
V_{RVP}	Reverse Voltage Protection level	No extra facilities needed (Note 5)	-58		V
Voltage monitoring					
$V_{I-range}$	Nominal Input Voltage measuring range		0	55	V
V_{I-prop}	Measuring accuracy Proportional factor	Calculated		+/-1	%
V_{I-zero}	Offset Error	Calculated		+/-0,1	%
				+/-55	mV

Note 1: Load dump protection according to ISO7636-2: 2004 pulse 5, Us=+70V
Note 2: Limited functionality when the voltage is higher than the nominal. If the voltage is less than 8,3 V, the control unit is in non-operational state.
Note 3: This parameter is only related to the logic power input.
Note 4: This parameter is influenced by +10V REF's load level.
Note 5: Nominal voltage level where reverse protection will be activated. Keep in mind the fuse parameters, such as the reaction time.

Epec Oy reserves all rights for improvements without prior notice

4.9 Connection Examples

This section includes examples on how to connect some external actuators when using each pin type.

4.9.1 Connection Examples for DI/PI_Type001

The following figures show examples of how to connect external actuators when using the DI/PI_Type001 pin:

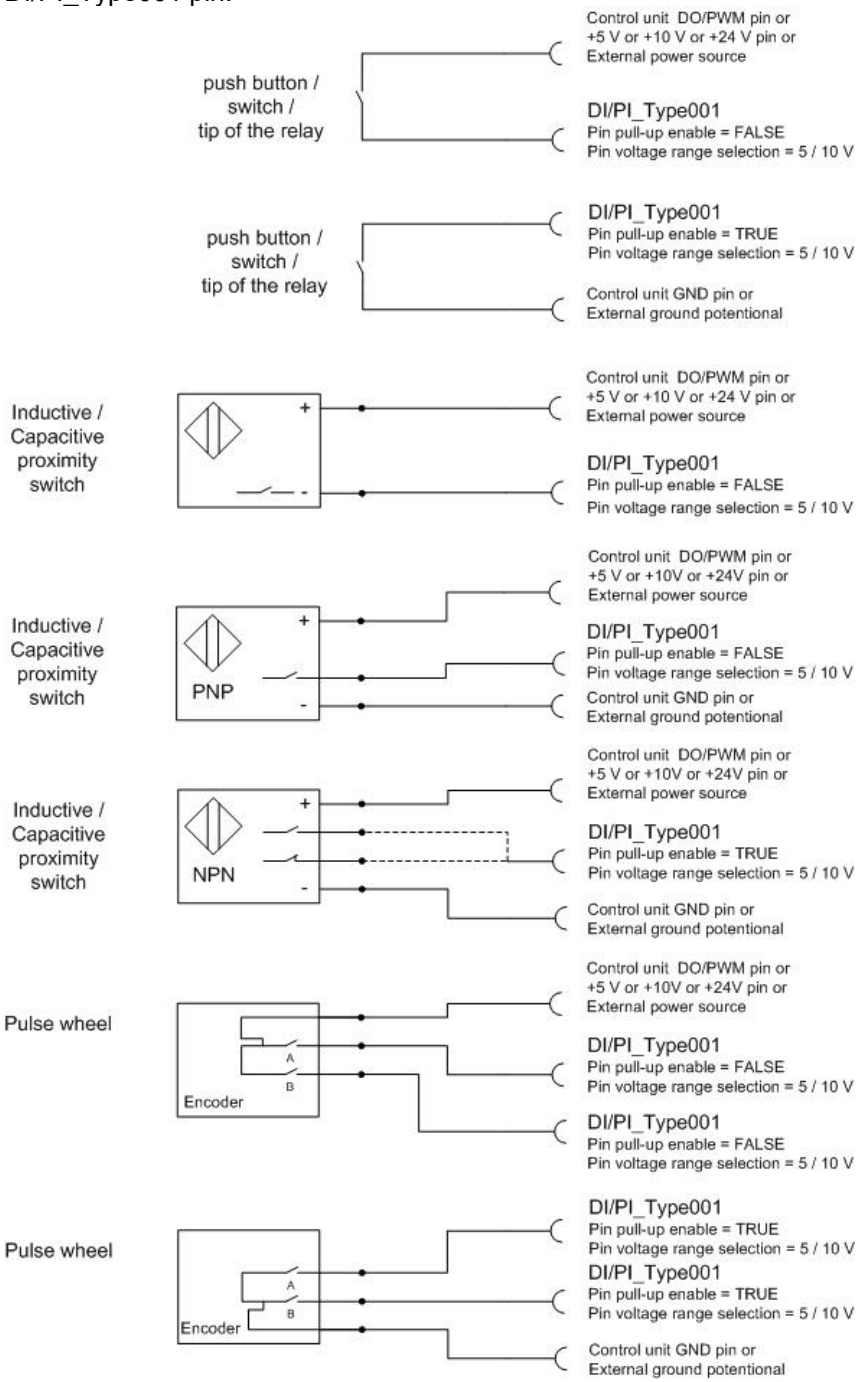

Epec Oy reserves all rights for improvements without prior notice

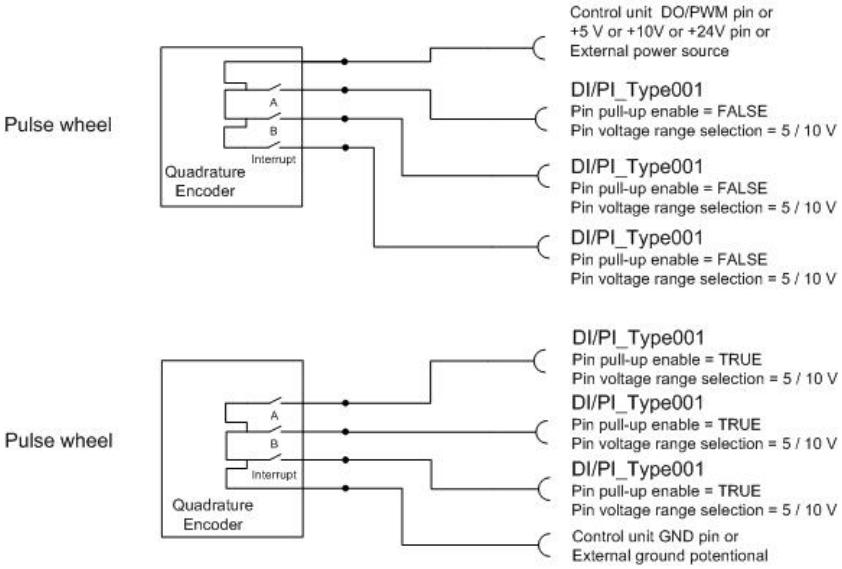

Epec Oy reserves all rights for improvements without prior notice

4.9.2 Connection Examples for DI/PI_Type002

The following figures show examples of how to connect external actuators when using the DI/PI_Type002 pin:

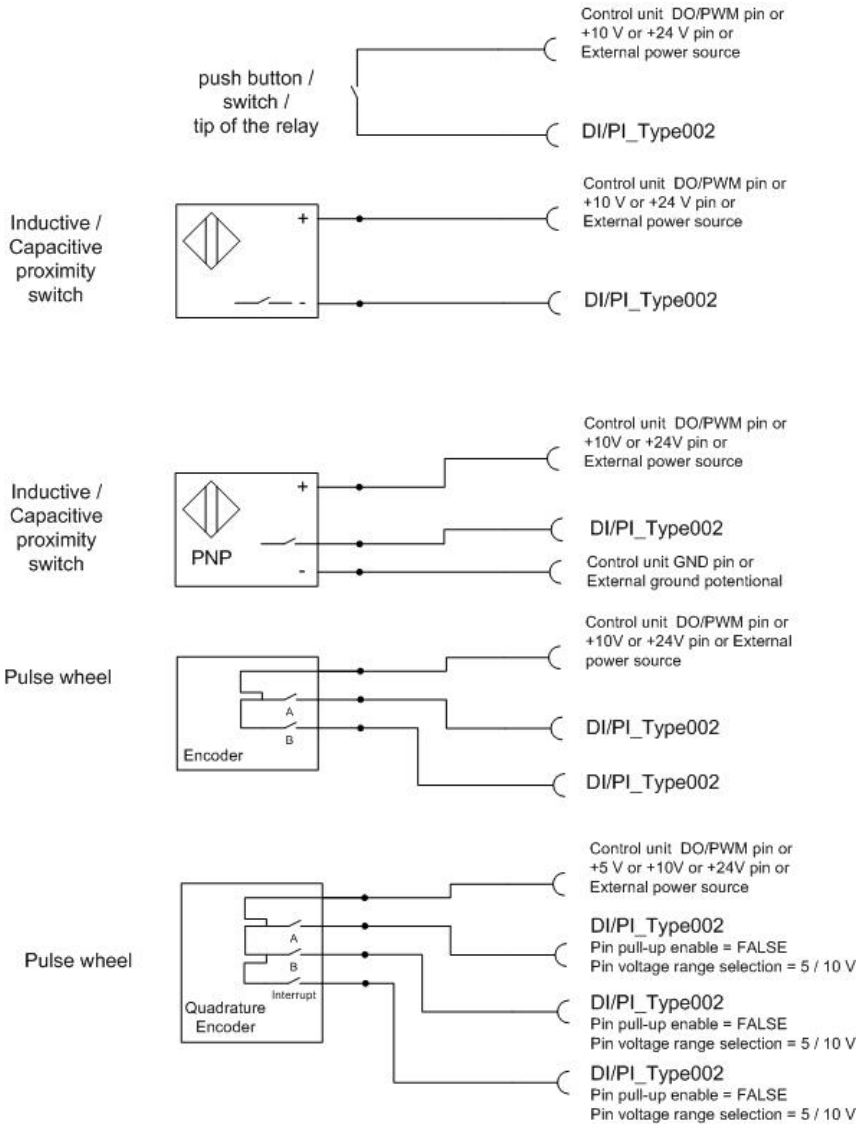

Epec Oy reserves all rights for improvements without prior notice

4.9.3 Connection Examples for DI/PI_Type003

The following figures show examples of how to connect external actuators when using the DI/PI_Type003 pin:

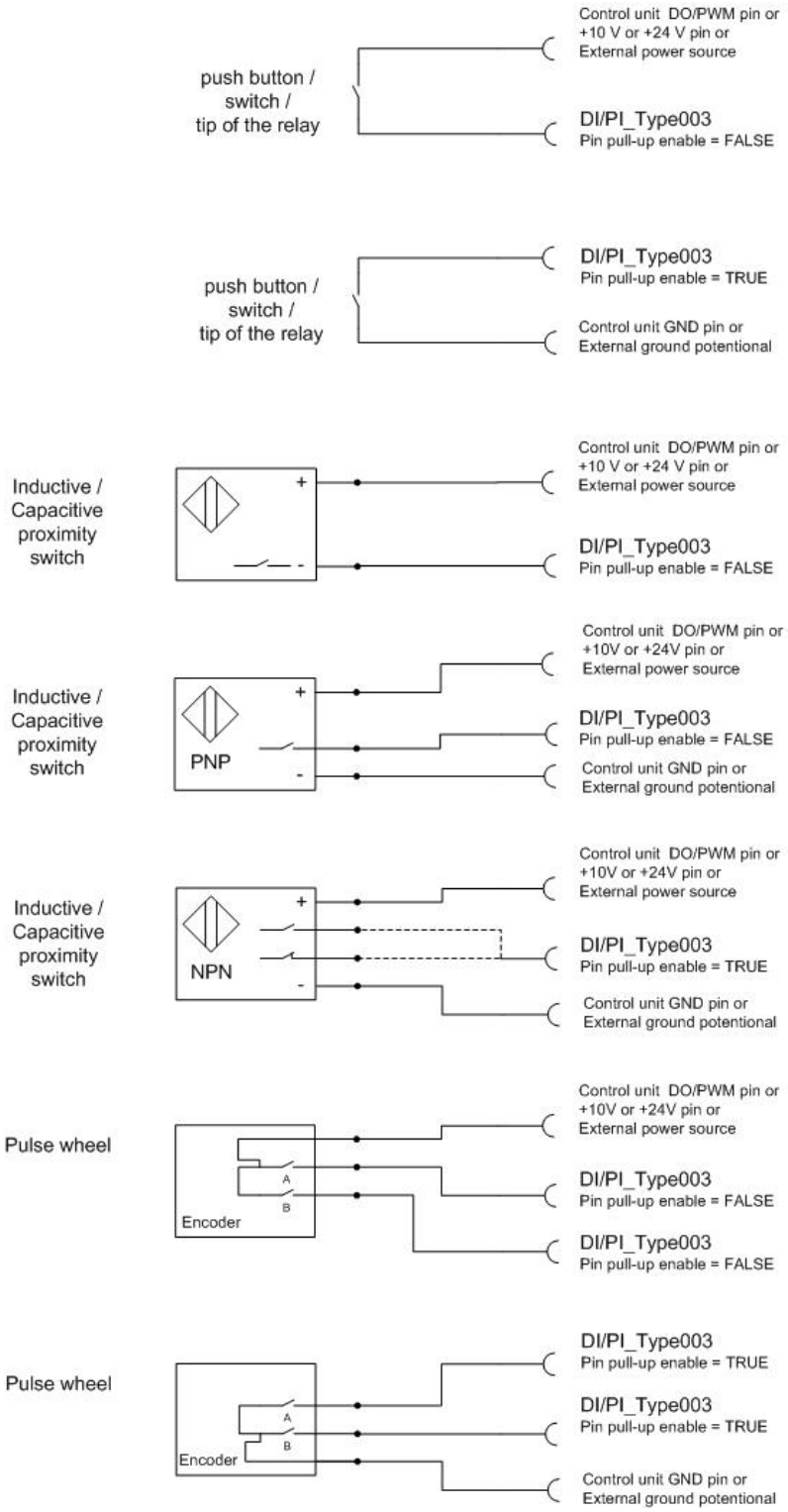

Epec Oy reserves all rights for improvements without prior notice

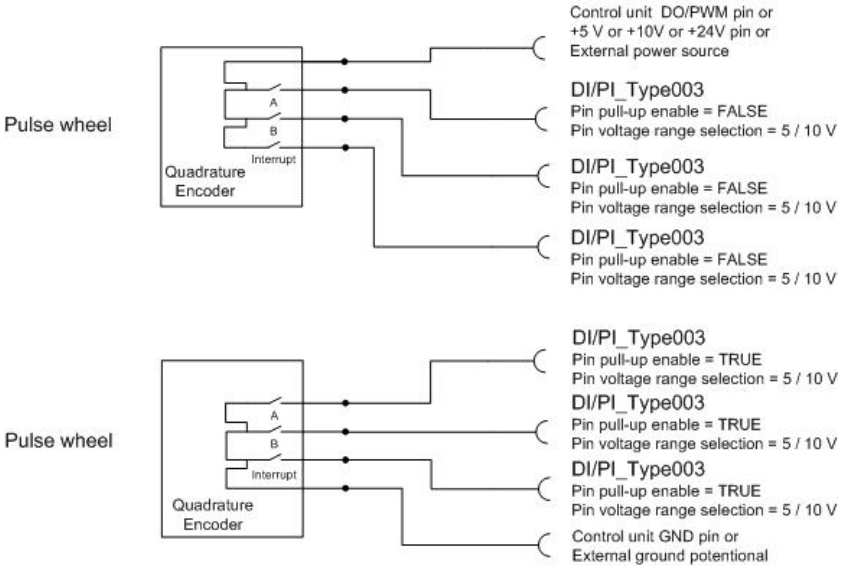

Epec Oy reserves all rights for improvements without prior notice

4.9.4 Connection Examples for PWM/DO/DI_Type005

The following figures show examples of how to connect external actuators when using the PWM/DO/DI_Type005 pin:

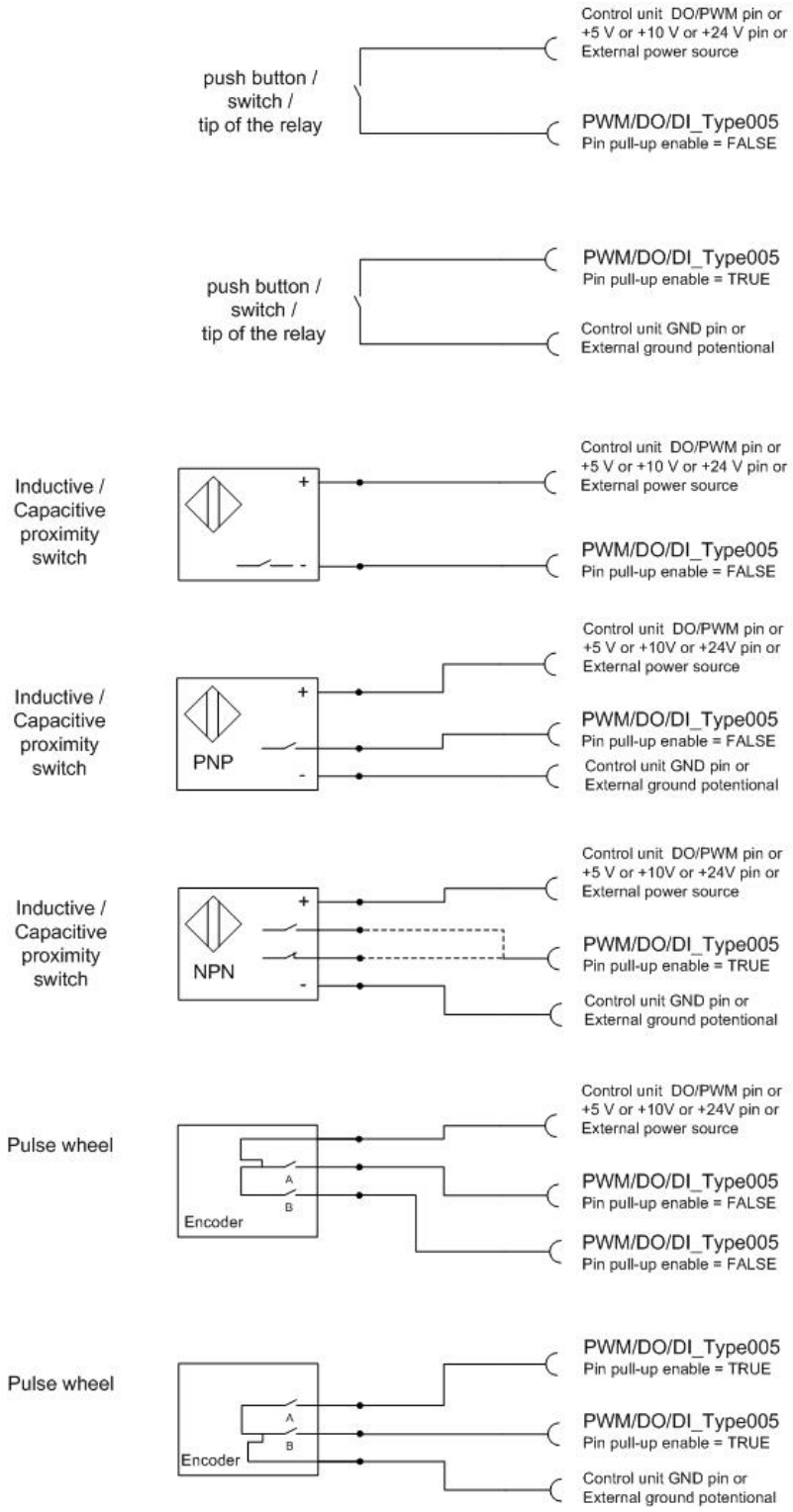

Epec Oy reserves all rights for improvements without prior notice

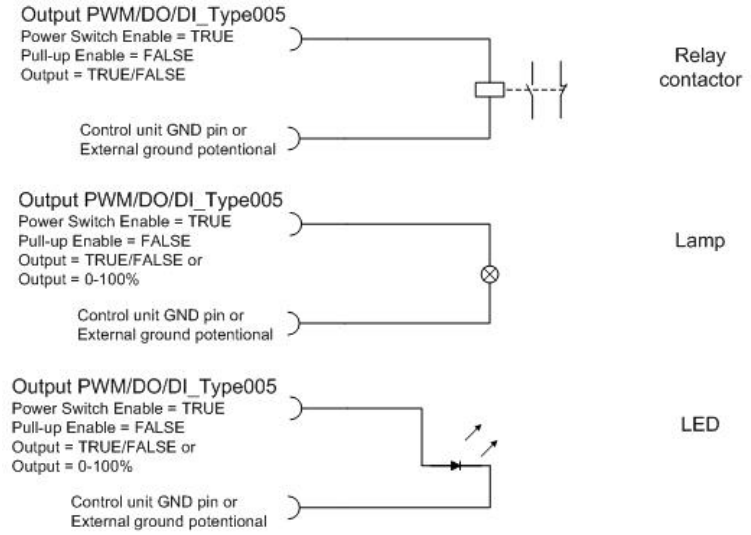

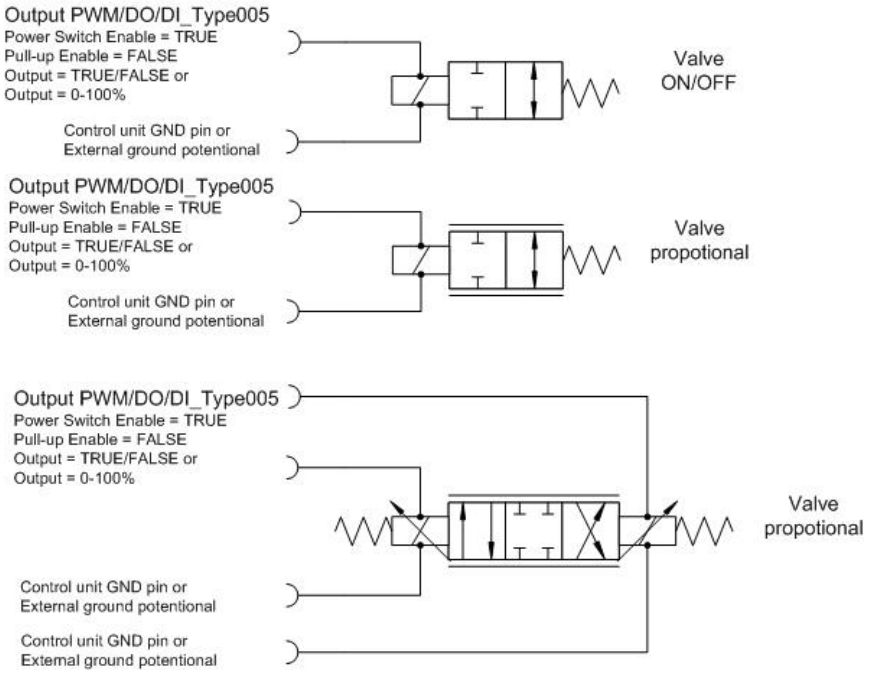

Epec Oy reserves all rights for improvements without prior notice

4.9.5 Connection Examples for PWM/DO/DI_Type006

The following figures show examples of how to connect external actuators when using the PWM/DO/DI_Type006 pin:

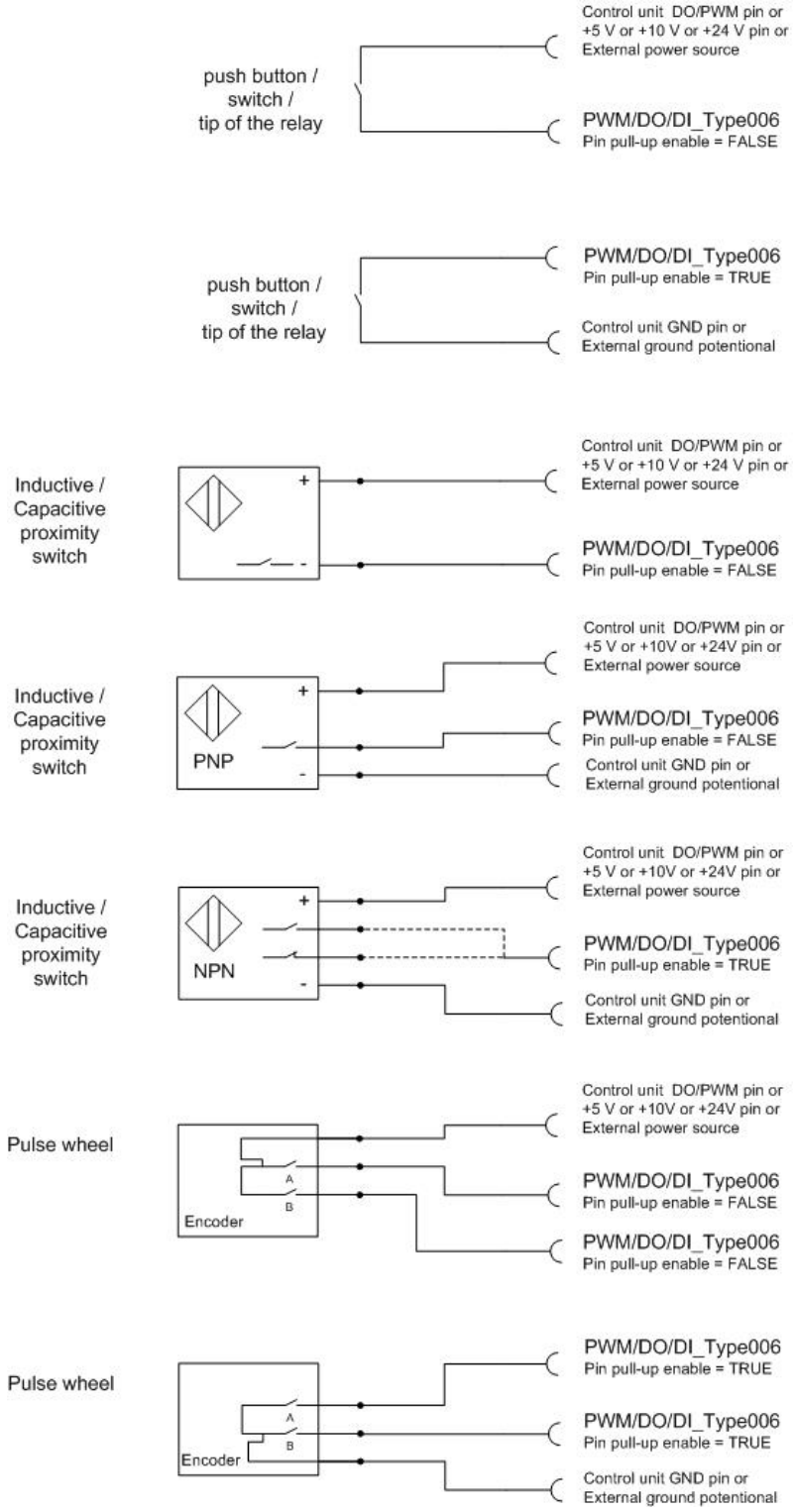

Epec Oy reserves all rights for improvements without prior notice

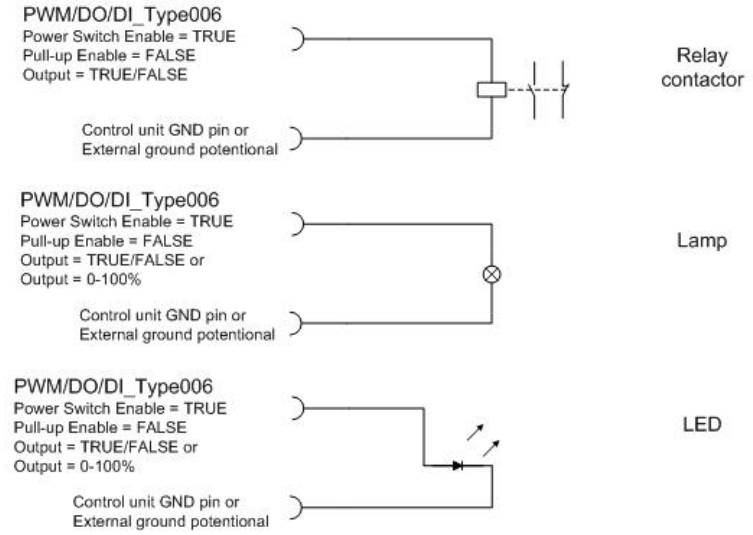

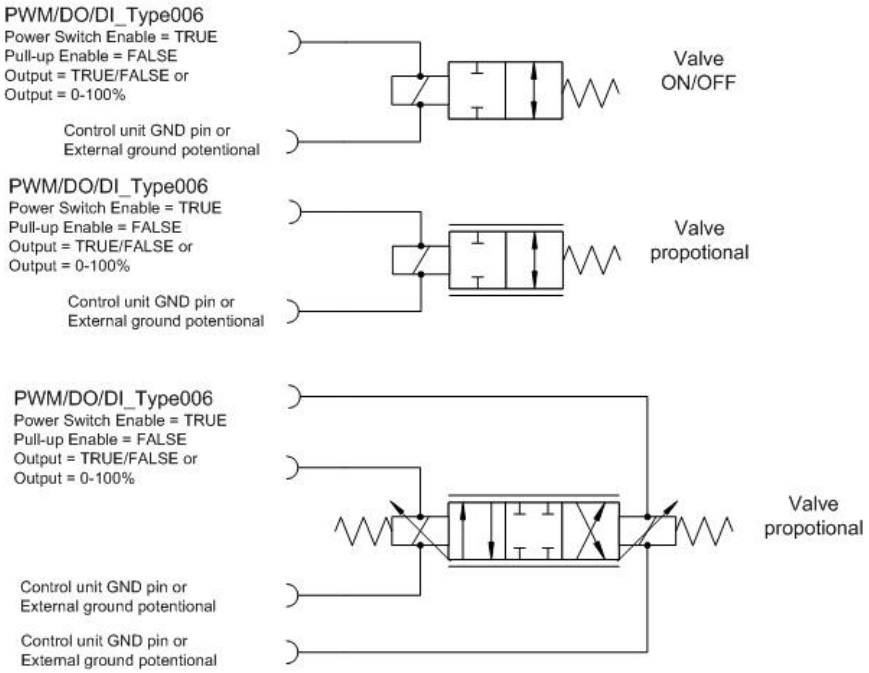

Epec Oy reserves all rights for improvements without prior notice

4.9.6 Connection Examples for PWM/DO/DI/CM_Type007

The following figures show examples of how to connect external actuators when using the PWM/DO/DI/CM_Type007 pin:

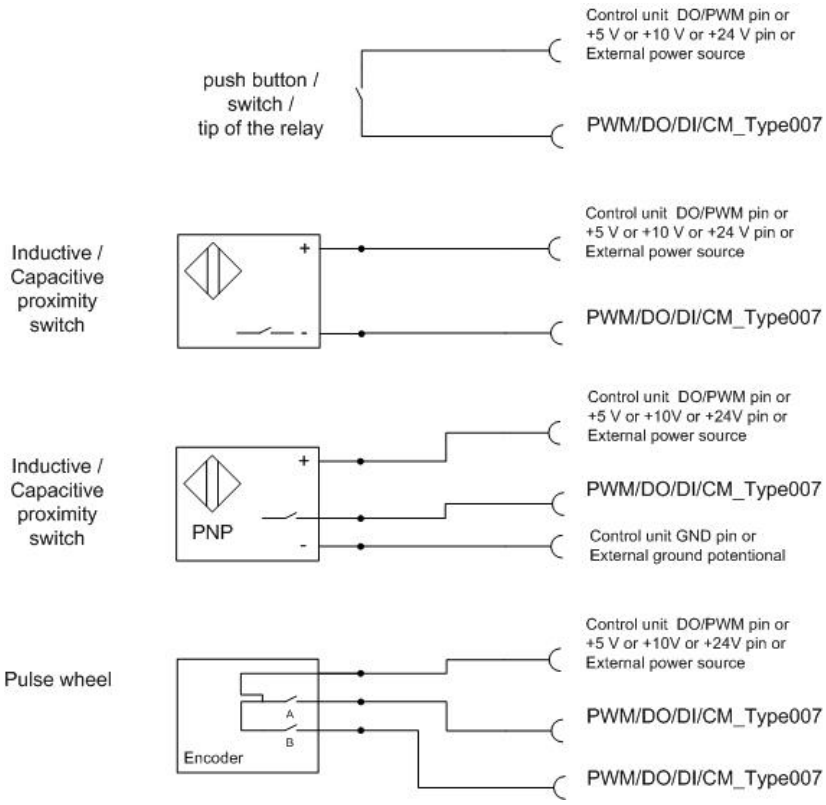

Epec Oy reserves all rights for improvements without prior notice

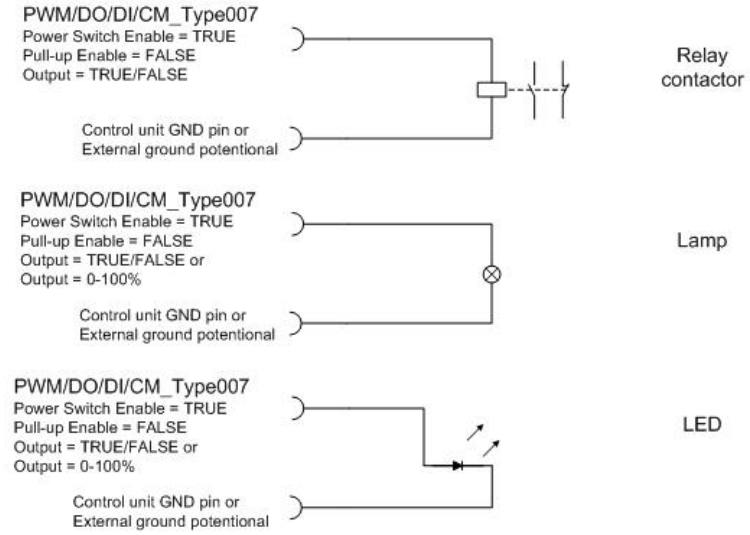

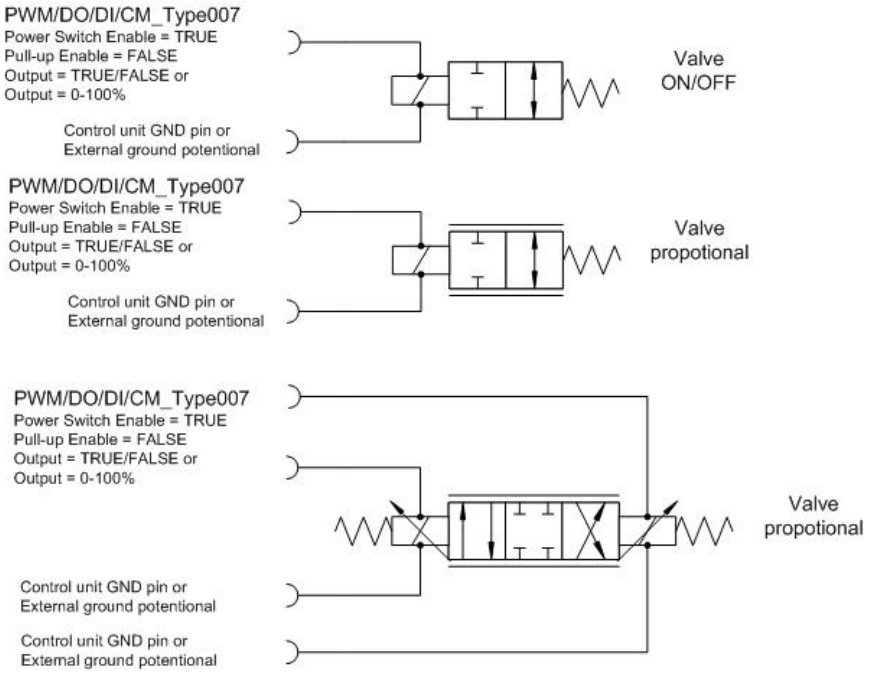

Epec Oy reserves all rights for improvements without prior notice

4.9.7 Connection Examples for PWM/DO/DI/CM/Type008

The following figures show examples of how to connect external actuators when using the PWM/DO/DI/CM_Type008 pin:

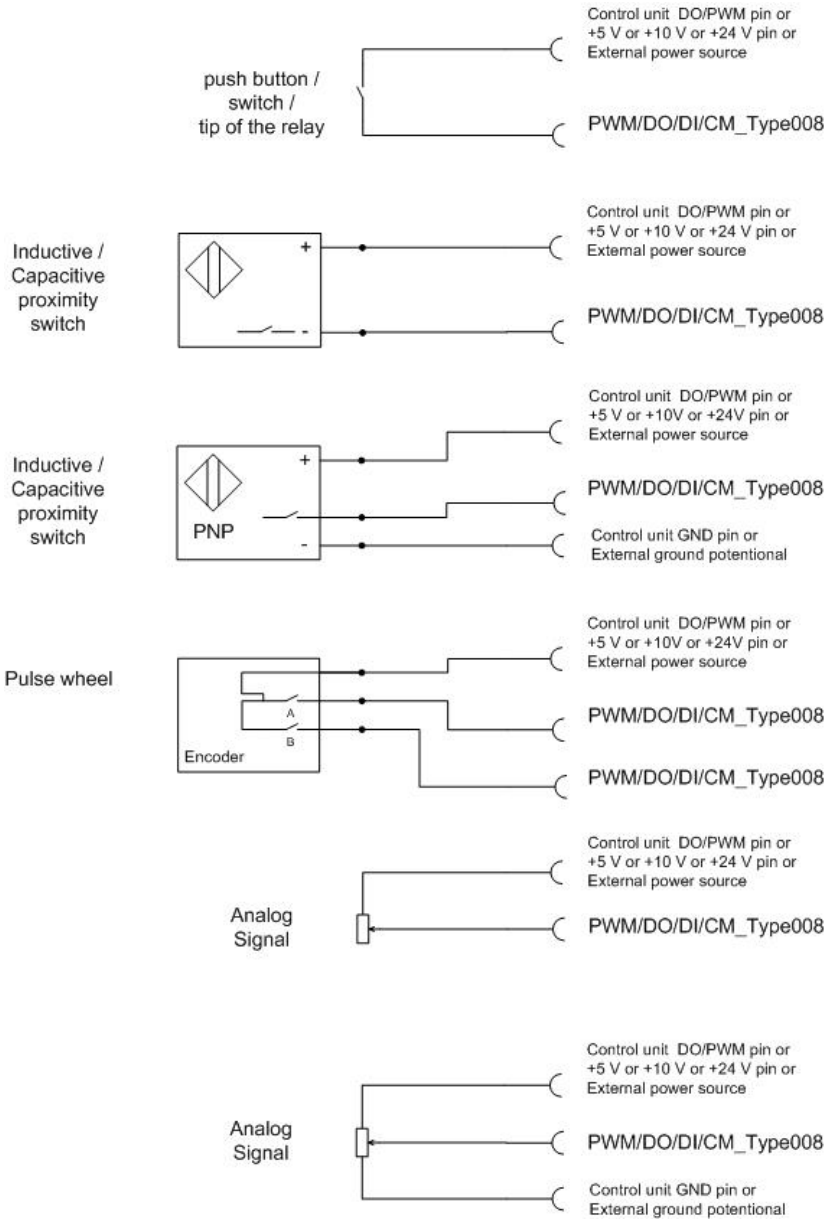

Epec Oy reserves all rights for improvements without prior notice

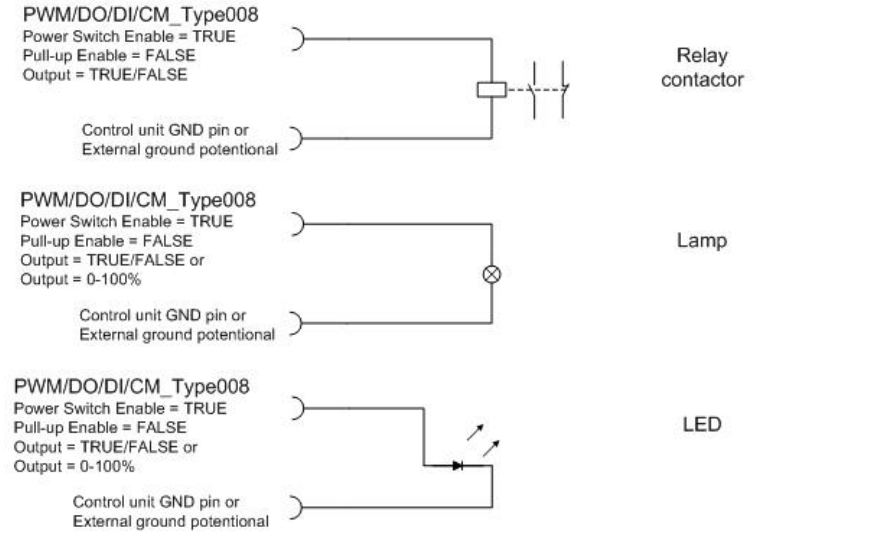

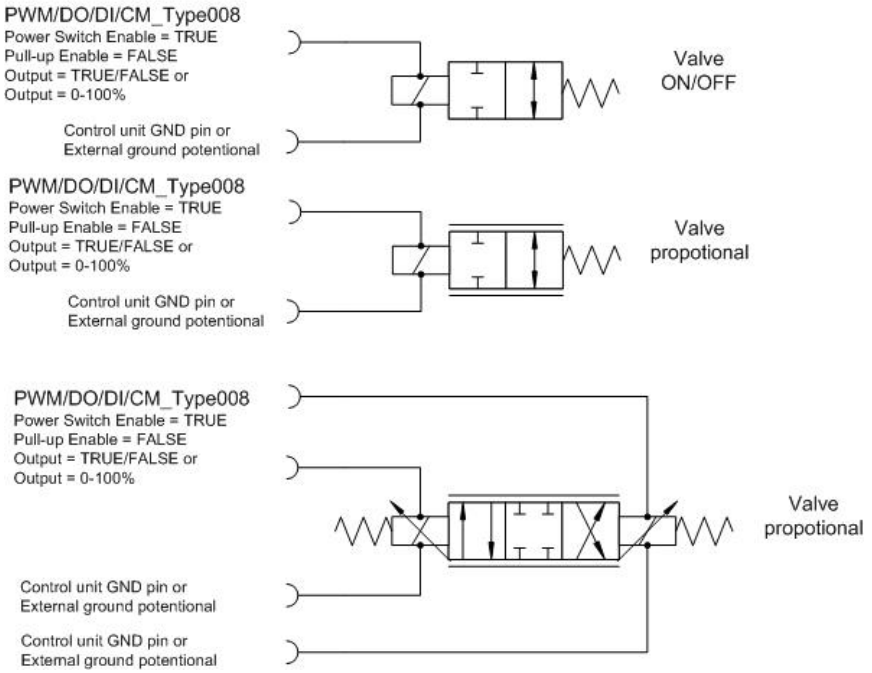

Epec Oy reserves all rights for improvements without prior notice

4.9.8 Connection Examples for DO/GND_Type010

The following figures show examples of how to connect external actuators when using the DO/GND_Type010 pin:

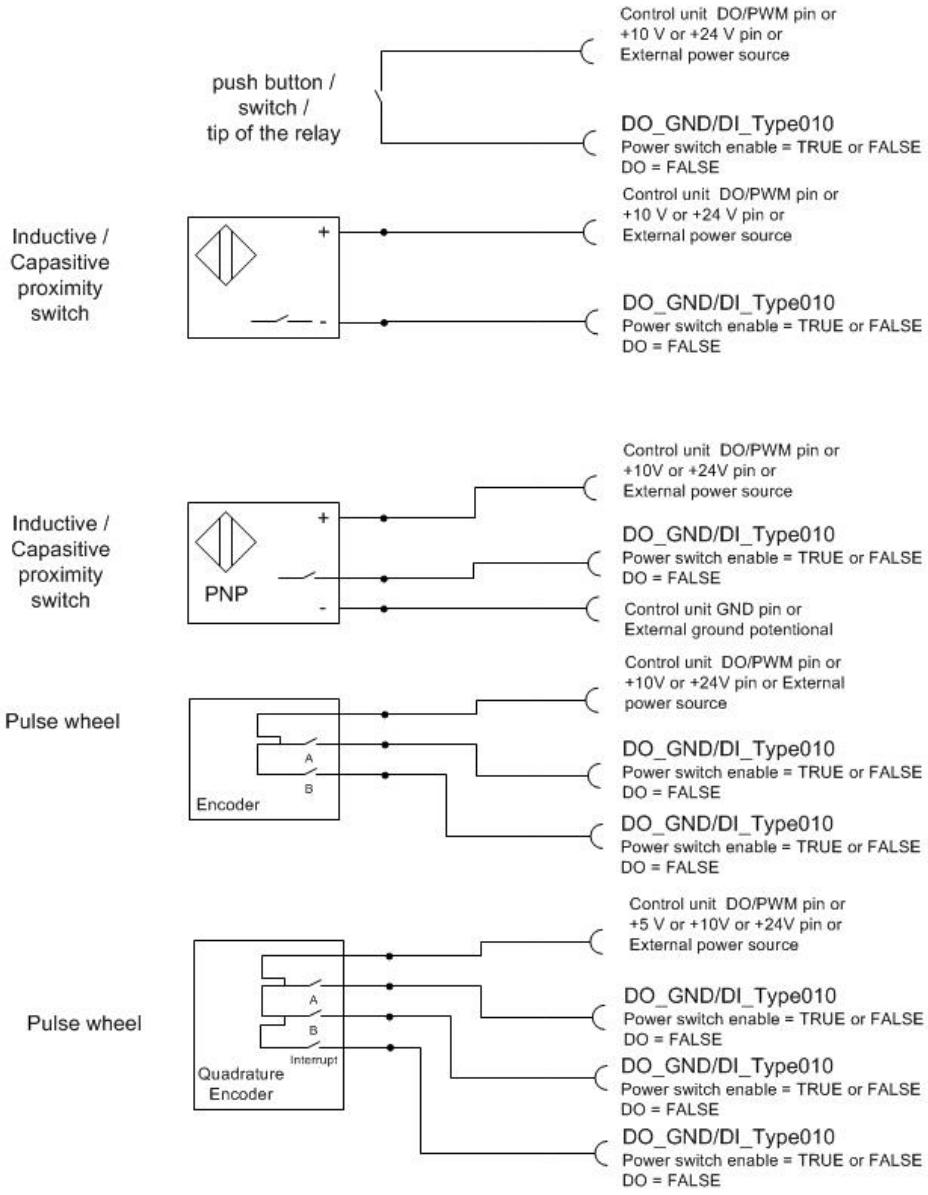

Epec Oy reserves all rights for improvements without prior notice

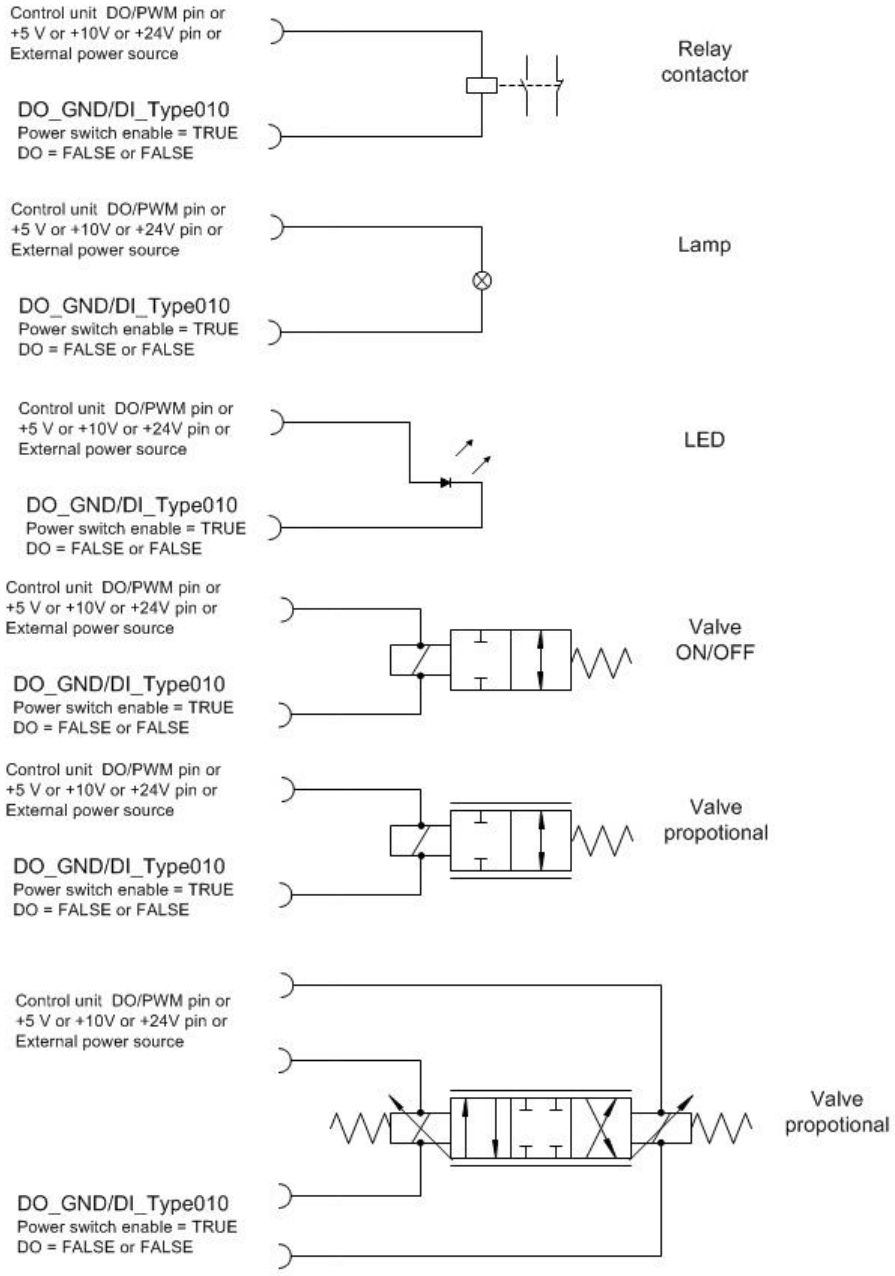

Epec Oy reserves all rights for improvements without prior notice

4.9.9 Connection examples with external actuators

Connection examples when using AI mode

The following figures show examples of how to connect external actuators when using the pin in AI mode:

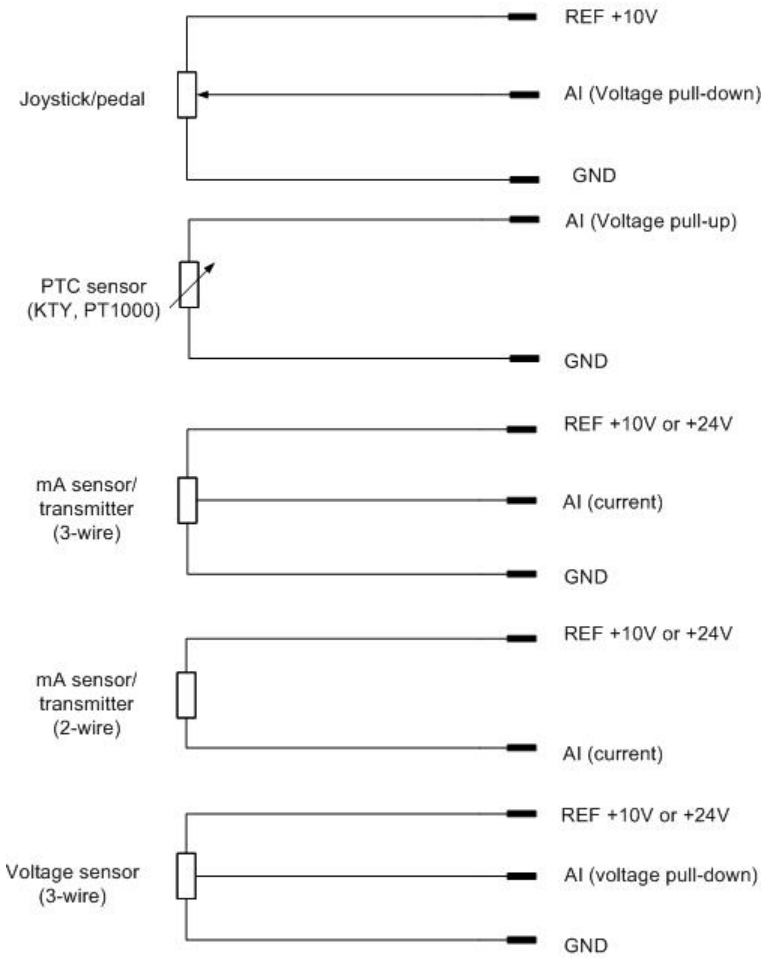

Epec Oy reserves all rights for improvements without prior notice

Connection examples when using DI mode

The following figures show examples of how to connect external actuators when using the pin in DI mode:

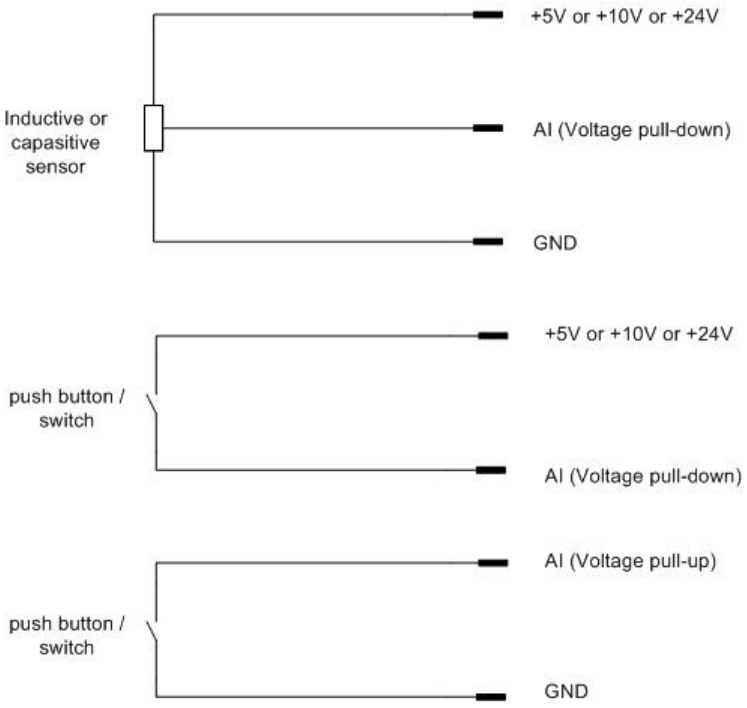

Epec Oy reserves all rights for improvements without prior notice

5 BUS CONNECTIONS

5.1 CAN Bus

CAN interface

- Codesys 2.3 IDE communication is supported for CAN1.
- Higher layer protocol is user programmable (CAN1, CAN2, CAN3, CAN4) communication
- The physical interface of CAN is according to ISO 11898 and CAN 2.0B protocol
- The PLCopen application can be downloaded via CAN1.
- All interfaces support bit rates 10, 20, 50, 125, 250, 500, 800, 1000 kbit/s
- All interfaces can be configured as listen only mode. An exception is CAN1, which is in boot up normal mode because it is used for Codesys communication.
- 11-bit and 29-bit message receive and transmit are supported.
- Transmitting of remote frames is supported in all CAN interfaces.
- Support for receiving one remote frame is supported. This is received for the control unit's own node guard functionality.

CAN bus connection pins

This product contains 4 CANs for the CAN bus connection. CAN1 has duplicated pins, so it can be easily used for chaining the control units.



In CAN1, it is possible to connect the internal termination resistor. For more information refer to section System topologies.

The CAN communication pins are located in the control unit's connector 1 (grey AMP35) as follows:

Designation	Pin number
CAN1 interface, system interface user programmable communication	X1.5 (CAN1 H) X1.6 (CAN1 H) X1.7 (CAN1 H terminator) X1.17 (CAN1 L) X1.18 (CAN1 L) X1.19 (CAN1 L terminator)
CAN2 interface, user programmable communication	X1.4 (CAN2 H) X1.16 (CAN2 L)
CAN3 interface, user programmable communication	X1.3 (CAN3 H) X1.15 (CAN3 L)
CAN4 interface, user programmable communication	X1.2 (CAN4 H) X1.14 (CAN4 L)

Epec Oy reserves all rights for improvements without prior notice

5.2 Ethernet interface

Ethernet communication is only for software downloading. In CODESYS 3.5 programmable 5050 version, Ethernet can be used also for exchanging diagnositc data.

Ethernet communication pins are located in the control unit's connector1 (grey AMP35) as follows:

Designation	Pin number
Ethernet interface	X1.25 (TD+) X1.26 (TD-) X1.27 (RD+) X1.28 (RD-)

Epec Oy reserves all rights for improvements without prior notice

6 INTERNAL DIAGNOSTICS

6.1 LED Indicator

The LED indicator light is situated on the top side of the unit according to the following figure:

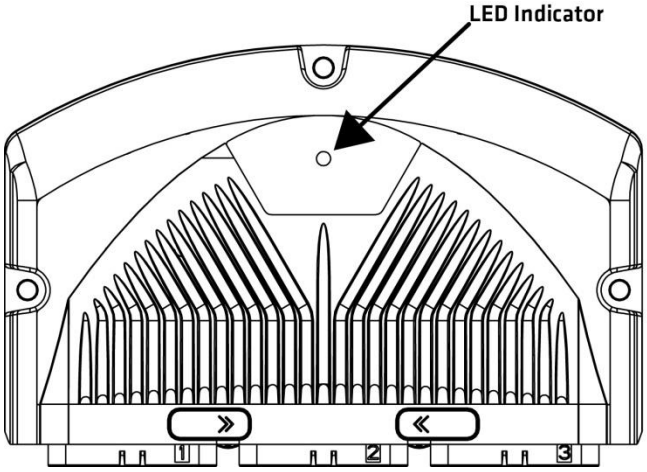

Some of the states must be implemented by using EXT programming library. For more information about EXT programming library, refer to *Epec programming and libraries manual*.

The LED has green and red indicators and they indicate different operating conditions according to the following table:

LED State	Green LED	Red LED	Implemented in device firmware	Implement by using EXT programming library	Explanation
Off	-	-			No supply voltage
CODESYS 3.5: Default Application or No User Application CODESYS 2.3: No User Application	Blinks 5 times / second	-	X		Firmware is running, no PLCopen application or application download in progress
CODESYS 3.5: ApplicationOk CODESYS 2.3: ApplicationOk or default application OK	Blinks 2 times/ second	-	X		Application is running and the system is OK
Application Stopped or initializing	LED is constantly on	-	X	X	Stopped / Starting / Initializing **Firmware:** LED is continuously on while application is stopped. **EXT Library:** LED is continuously on also during the initialization: starting from power on until the application is running and the I/O / CAN initializations are done.

Epec Oy reserves all rights for improvements without prior notice

FatalError	-	LED is constantly on	X		Control unit boot-up failed or a critical firmware error while running.
ApplicationError	-	Blinks 2 times/ second		X	External PLCopen library controls, for example when output controlling is disabled, so called safe state.
IOError	-	Blinks 5 times / second		X	External PLCopen library controls, for example when system is OK but there is short circuit in one of the outputs or other similar error is active (depends of application)
Update	Blinks alternately with red LED	Blinks alternately with green LED	X		After firmware update boot-up, during the installation phase, red and green LEDs are flashed alternately.

6.2 Temperature Monitoring

Temperature
This control unit has two temperature sensors: one for monitoring processor area temperature and one for monitoring PCB area temperature.
The temperature information is useful for self diagnostic purposes and safety features.

Processor Area Temperature
This temperature sensor monitors the temperature near the microcontroller.

Symbol	Parameter	Conditions	Min	Max	Units
Temperature monitoring					
$Core_{Temp}$	Nominal Core Temperature measuring range		-40	125	°C
T_{prop}	Temperature measuring accuracy Proportional factor			+/-1,0	%
V_{zero}	Offset Error			+/-0,1	%
				+/-4,88	mV

Epec Oy reserves all rights for improvements without prior notice

PCB area temperature
This temperature sensor monitors the PCB area temperature.

Symbol	Parameter	Conditions	Min	Max	Units
Temperature monitoring					
PCB_{Temp}	Nominal PCB Temperature measuring range		-40	125	°C
T_{prop}	Temperature measuring accuracy Proportional factor			+/-2,2	%
V_{zero}	Offset Error			+/-0,1	%
				+/-4,88	mV

6.3 Error Log

The control unit's internal error log stores the firmware errors in a log. The error log contains two memory areas: one for application and one for firmware.

For more information about the logs and how to read them, refer to Epec Programming and Libraries Manual MAN000538.

Epec Oy reserves all rights for improvements without prior notice

7 APPROVALS AND SAFETY

7.1 EMC Tests

Epec 5050 control units are certified according to EMC tests that are described in this section.

The following tables provide a summary of performed EMC tests:

Emission tests according to the test specification EN 61000-6-3

Emission test	Test method
Radiated disturbance	CISPR 16-2-3
Conducted disturbance at mains ports	CISPR 16-2-1

Immunity tests according to the test specification EN 61000-6-2

Immunity test	Test method
Electrostatic discharge (ESD)	EN 61000-4-2
Radiated radio-frequency electromagnetic field	EN 61000-4-3
Electrical fast transients (EFT/B)	EN 61000-4-4
Conducted radio-frequency common mode	EN 61000-4-6

Emission tests according to the E/ECE Regulation No. 10, Revision 3 (2008)

Emission test	Test method	Conclusion
Measurement of radiated interference field strength in the frequency range 30 – 1000 MHz	E/ECE Reg. No. 10, Annexes 7 and 8	Pass [1)]
Measurement of conducted disturbances	E/ECE Reg. No. 10, Annex 10	Pass [2)]

[1)] Limit values according to the E/ECE Regulation No. 10, Sections 6.5.2 and 6.6.2.

[2)] Limit values according to the E/ECE Regulation No. 10, section 6.9.1.

Immunity tests according to the E/ECE Regulation No. 10, Revision 3 (2008)

Immunity test	Test method	Conclusion
Radiated radio-frequency electromagnetic field	E/ECE Reg. No. 10, Annex 9	Pass [1)]
Immunity to transient disturbances conducted along supply lines	E/ECE Reg. No. 10, Annex 10	Pass [2)]

[1)] The requirements defined in the E/ECE Regulation No. 10, section 6.7.2.

[2)] The requirements defined in the E/ECE Regulation No. 10, section 6.8.1.

Epec Oy reserves all rights for improvements without prior notice

The following tables provide more detailed descriptions about the performed EMC tests:

<table>
<tr><th colspan="2">Emission tests according to the E/ECE Regulation No. 10, Revision 3 (2008)</th></tr>
<tr><td>Radiated disturbance emission test</td><td>
Test method E/ECE Reg. No. 10, Annexes 7 and 8
<table>
<tr><th>Frequency (MHz)</th><th>Limit value (dBmV/m)</th></tr>
<tr><td>30 – 1000</td><td>62/52/63
(Broadband QP)</td></tr>
<tr><td>30 – 1000</td><td>52/42/53
(Narrowband AVE)</td></tr>
</table>
</td></tr>
<tr><td>Conducted disturbances emission test</td><td>
Test method E/ECE Reg. No. 10, Annex 10, ISO 7637-2: 2004
<table>
<tr><th>Port</th><th>Limit level (V)</th></tr>
<tr><td rowspan="2">12V DC input</td><td>+75</td></tr>
<tr><td>-100</td></tr>
<tr><td rowspan="2">24V DC input</td><td>+150</td></tr>
<tr><td>- 450</td></tr>
</table>
</td></tr>
</table>

Epec Oy reserves all rights for improvements without prior notice

Immunity tests according to the E/ECE Regulation No. 10, Revision 3 (2008)	
Immunity to transient disturbances conducted along supply lines test	• Test method E/ECE Reg. No. 10, Annex 10, ISO 7637-2: 2004 • Performance criterion: • 24 V input, Pulse: • 12 V input, Pulse:
Immunity of ESAs to electromagnetic radiation	• Test method E/ECE Reg. No. 10, Annex 9 • Performance criterion: No degradation of 'Immunity-related functions'

Pulse	Criterion
1	C
2a	A
2b	C
3a	A
3b	A
4	A
5	B

Pulse	Pulse parameters
1	3/2000 µs, -600 V, 500 pulses
2a	1/50 µs, +112 V, 5000 pulses
2b	20V, 500 ms, 10 pulses
3a	10/90 ms, -300 V, 60 minutes
3b	10/90 ms, +290 V, 60 minutes
4	100 ms -12 V, 20 s -5 V, 10 pulses
5	+70 V 1 pulses

Pulse	Pulse parameters
1	1/2000 µs, -150 V, 500 pulses
2a	1/50 µs, +112 V, 5000 pulses
2b	10V, 500 ms, 10 pulses
3a	10/90 ms, -220 V, 60 minutes
3b	10/90 ms, +150 V, 60 minutes
4	25 ms -6.0 V, 5 s -2.5 V, 10 pulses
5	+70 V 1 pulses

Modulation	Frequency Range (MHz)	Test level
Modulation AM80% 1 kHz	20-200	60 mA
Modulation AM80% 1 kHz	80-1000	30 V/m
PM 577/4600 µs	800-1000	30 V/m
PM 577/4600 µs	1000-2000	30 V/m

Epec Oy reserves all rights for improvements without prior notice

Classification of functional status

Class A:
All functions of a device/system perform as designed during and after exposure to disturbance.

Class B:
All functions of a device/system perform as designed during and after exposure to disturbance. However, one or more of them can go beyond specified tolerance. All functions return automatically to within normal limits after exposure is removed. Memory functions shall remain class A.

Class C:
One or more functions of a device/system do not perform as designed during exposure but return automatically to normal operation after exposure is removed.

Class D:
One or more functions of a device/system do not perform as designed during exposure and do not return to normal operation until exposure is removed and a device/system is reset by simple “operator/use” action.

Class E:
One or more functions of a device/system do not perform as designed during exposure and cannot be returned to operation without repairing the device/system.

EN 61000-6-3 (2007) Electromagnetic compatibility-generic emission standard part6-3: residential, commercial and light industry	
Radiated disturbance emission test	• Test method EN 55022, CISPR 16-2-3
Conducted disturbance at main ports emission test	• Test method EN 55022, CISPR 16-2-1

Frequency (MHz)	Limit value (dBmV/m)
30 – 1000	40/47 (QP)
1000 – 2000	56/76 (QP)

Frequency (MHz)	Limit value (dBmV)
0,15 - 30	66/56/60 (QP)
0,15 – 30	56/46/50 (AVE)

Epec Oy reserves all rights for improvements without prior notice

EN 61000-6-2 (2005)
Electromagnetic compatibility-generic immunity standard
part6-2: industrial environment

Conducted radio-frequency common mode immunity test

- Test method EN 61000-4-6
- Performance criterion A

Specification	Port	Test level
Frequency range 0,150-80 MHz Modulation AM80% 1 kHz Sweep step 1%, time/step 1 s	DC input port	10 Vemf
	Signal ports	10 Vemf

Radiated radio-frequency electromagnetic field immunity test

- Test method EN 61000-4-3
- Performance criterion A

Specification	Range (MHz)	Test level
Frequency range 80-2700 MHz Modulation AM 80% 1 kHz Sweep step 1%, time/step 1 s	80-2500	10 V/m
	2500-2700	10 V/m

Electrical fast transient (EFT/B) immunity test

- Test method EN 61000-4-4
- Performance criterion B

Test pulse	Port	Test level
5 (Tr) / 50 (Th) ns, repetition frequency 5 kHz, duration 1 minute	DC input port	± 2,0 kVp
	Signal port	± 1,0 kVp

Electrostatic discharge (ESD) immunity test

- Test method EN61000-4-2
- Performance criterion B

Discharge mode	Test level (kVp)
Contact	± 2, ± 4, ± 6
Indirect contact	± 2, ± 4, ± 6
Air	± 2, ± 4, ± 8

Performance criteria for immunity tests

Performance criterion A:
The EUT shall continue to operate as intended during and after the test. No degradation of performance is allowed.

Performance criterion B:
The EUT shall continue to operate as intended after the test. However, moderate degradation of performance is allowed. No change of actual operating state or loss of memory functions is allowed.

Epec Oy reserves all rights for improvements without prior notice

7.2 Environmental Tests

The following environmental tests have been performed on Epec 5050 control units:

Temperature			
Test	**Temperature**	**Duration/ Exposure time**	**Remarks**
Cold IEC 60068-2-1 (2007-03), Test Ad	-45 °C	16 h	• 1 °C/min
Dry heat IEC 60068-2-2 (2007-07), Test Bb	70 °C	16 h	• 1 °C/min
Damp heat cycling IEC 60068-2-30 (2005-08), Test Db	+25 °C/+55 °C		• rel. humidity >90% • cycle duration 24h • six test cycles
Change of temperature IEC 60068-2-14 (2009-01), Test Na	-50 °C/+60 °C	3 h	• change time between extreme temperatures 1-2 min • 5 test cycles
Change of temperature IEC 60068-2-14 (2009-01), Test Nb	-40 °C/+70 °C	3 h	• change of temperature 10 °C/min • 2 test cycles

Mechanical resistance		
Test	**Duration and direction**	**Remark**
Shock test IEC 60068-2-27 (2008-02) Test Ea	• pulse duration 6 ms • 500 impulses in every six directions	• half sine pulse shape • peak acceleration 500 m/s2
Vibration, random IEC 60068-2-64 (2008-04), Test Fh	• test duration 60 min in every three test direction	• ASD-level 5 m2/s3, 10 … 200 Hz • ASD-level 1,0 m2/s3, 200 … 500 Hz • total spectral acceleration 3,54 grms
Free fall, IEC 60068-2-31 (2008-05), Test Ec	• one fall / direction on each surface and corner	• fall height 100 cm

Corrosion			
Test	**Temperature**	**Duration**	**Concentration**
Salt spray test ISO 9227	+35 °C	24 h	5 % NaCl

Tightness tests for IP67		
Test	**Duration and prosedure**	**Remark**
Dust test for IP6X according to IEC 60529	• exposed to the free settling dust for 8 hours • under pressure during the test 2 kPa • flow rate of the air 0, 1 l/min	• no deposit of dust noticed inside • complies with the requirements stated for the protection class IP6X
Water test for IPX7 according to IEC 60529	• immersion duration 30 minutes • immersion depth 1000 mm • water temperature +22 °C	• no ingress of water noticed inside • complies with the requirements stated for the protection class IPX7

Epec Oy reserves all rights for improvements without prior notice

8 MECHANICS AND CABLING

8.1 Unit Dimensions

Unit dimensions from the top:

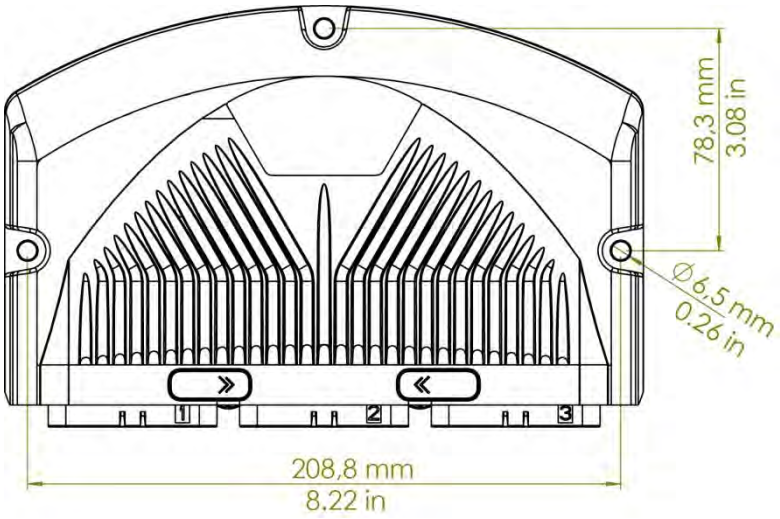

Unit dimensions from the rear side:

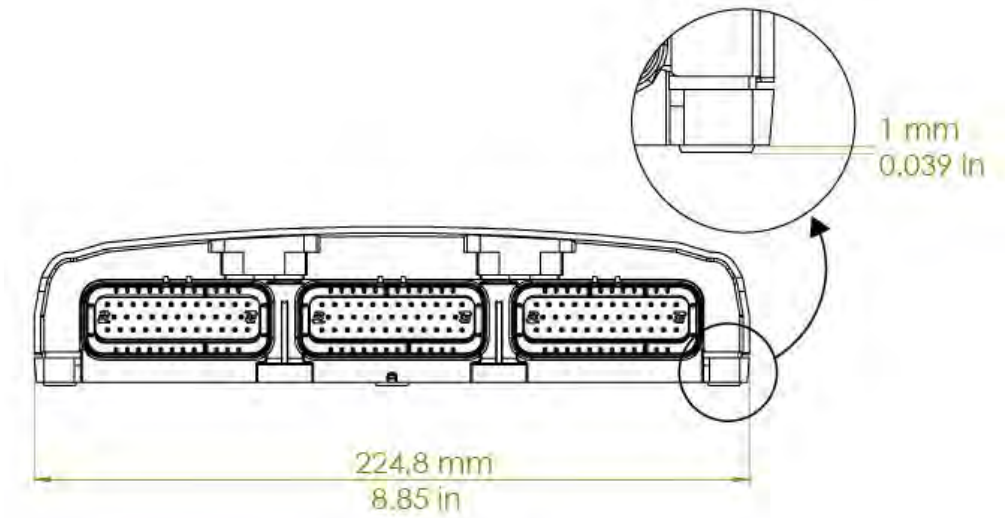

Unit dimensions from the side:

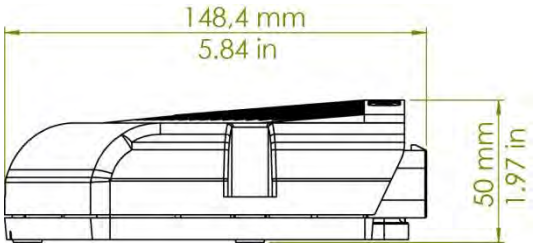

Epec Oy reserves all rights for improvements without prior notice

8.2 Mounting and Cleaning



Control unit mounting location should be planned so that the machine's washing does not damage the unit.

A direct water jet towards the control units should be avoided, especially when using high pressure. Also, the use of any such solvent that causes damage to electronic devices should be avoided when handling the control units.



When cleaning the control unit, do not use highly alkaline / acidic substances, too hot water, or too heavy mechanical abrasion.



In moist conditions, the unit must be mounted and oriented so that the connectors are not filled with water.



If the product's assembly screws or product labels have been removed or damaged or the unit housing has been opened in any way, the warranty becomes null and void.

- The mounting is done with 3 pieces of M6 screws to DIN 912
- It is possible to use a spring washer under the screw head
- Mounting must be done on to a conductive metal base. The control unit's aluminum housing must have a galvanic connection to the machine frame
- The paint must be removed from the control unit under each screw head before mounting, to ensure a galvanic connection to the control unit frame. Also, remove the paint from the machine frame, where the control unit will be attached.
- 3-point mounting allows mounting on a slightly uneven surface
- Reserve 10 cm installation space for the connector cables
- Mounting position must be horizontal or vertical to allow water, etc. flowing away from connectors, see the figures below.

Epec Oy reserves all rights for improvements without prior notice

Do not mount the unit in a position where the bottom side or the connectors are facing up.

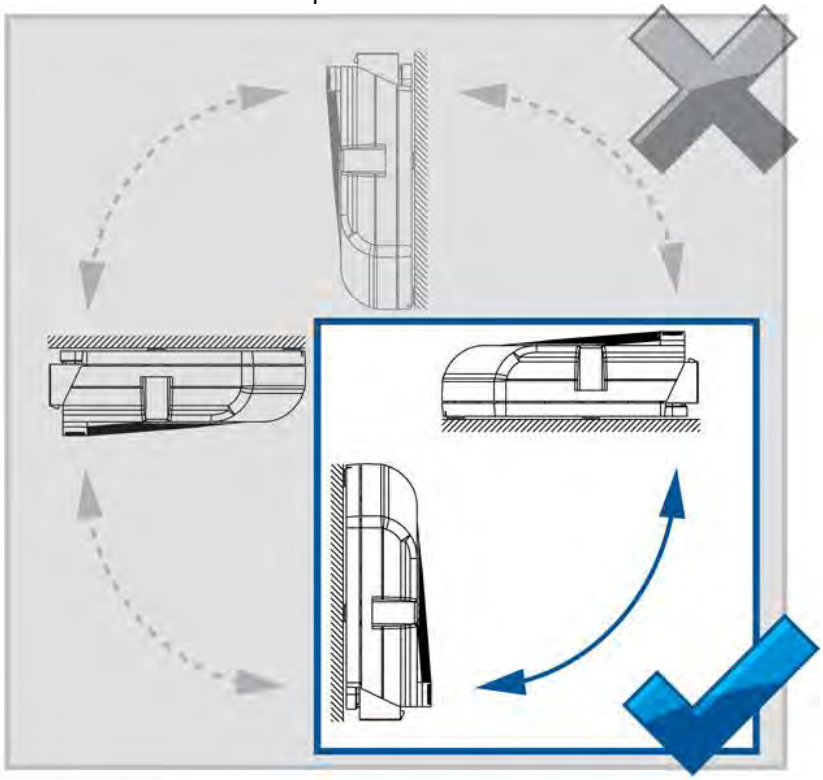

Do not mount the unit in a position where the connector side is facing up.

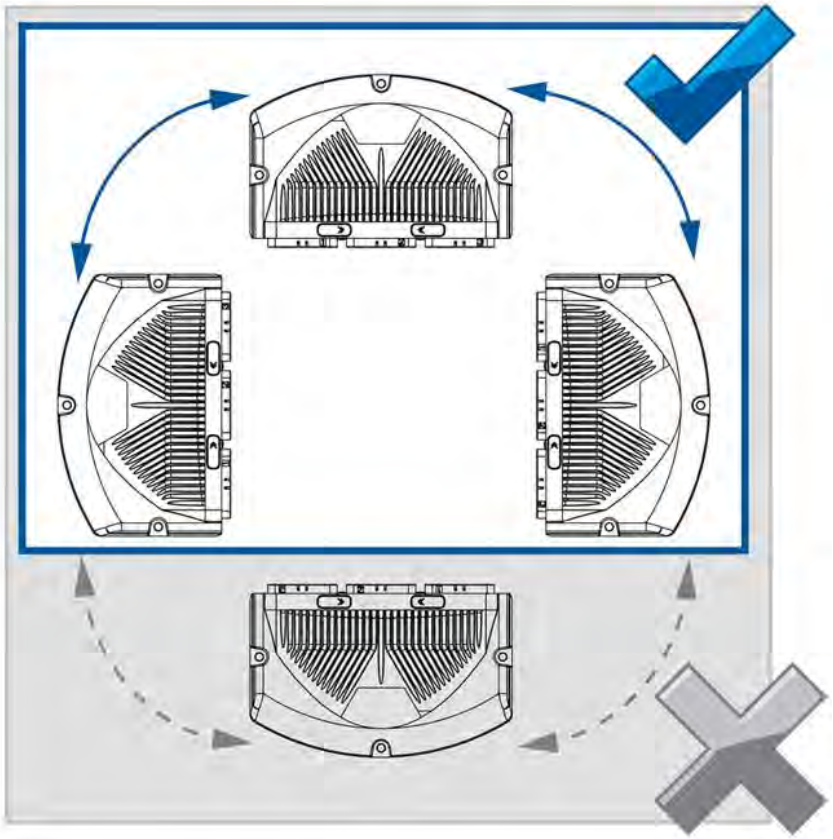

Epec Oy reserves all rights for improvements without prior notice

8.3 Plugging and unplugging the cables/connectors

All Epec control units use heavy duty gold plated, locked and sealed AMPSEAL connectors. The following figure shows an example of an AMPSEAL connector:

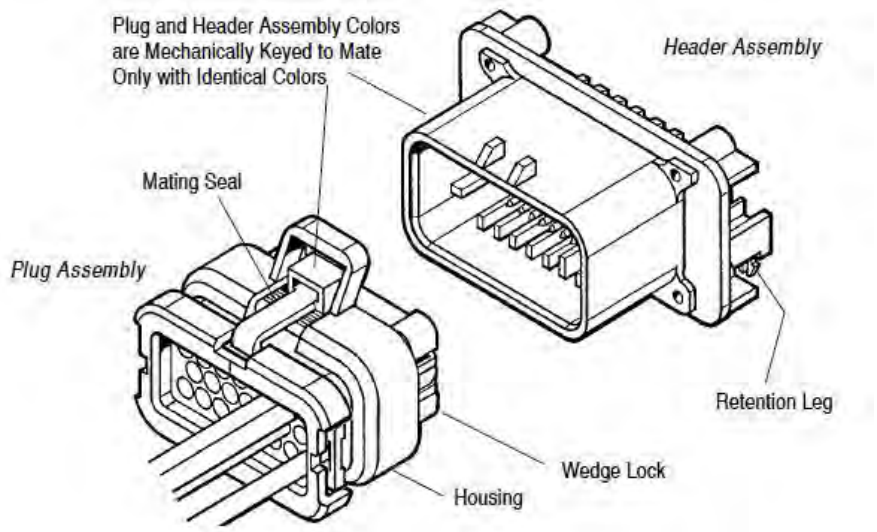

- Gold plated AMPSEAL connectors pack a current of 15 amperes per contact and tolerate operating temperature range.
- All module connectors are mechanically keyed to mate only with identical colors (blue, grey and black).



When connecting, make sure that:

- connectors are pressed down to the bottom and that they are locked
- connectors are clean (avoid moisture or dirt inside the connector)
- unused connectors are covered with empty connectors of the same color (this helps to keep the control unit connectors dry and protected)
- all cables, connectors and tools are of correct type, and sufficiently high quality, and suitable for this kind of use (protection for moisture, mechanical stability, power durability, coupling resistance among other things)
- there is a sufficient margin (slack) left in the cables to prevent the torsion of the connectors
- wires are bound to the control unit cover base knob with cable ties

Epec Oy reserves all rights for improvements without prior notice

The following figure describes some general instructions about the connectors.

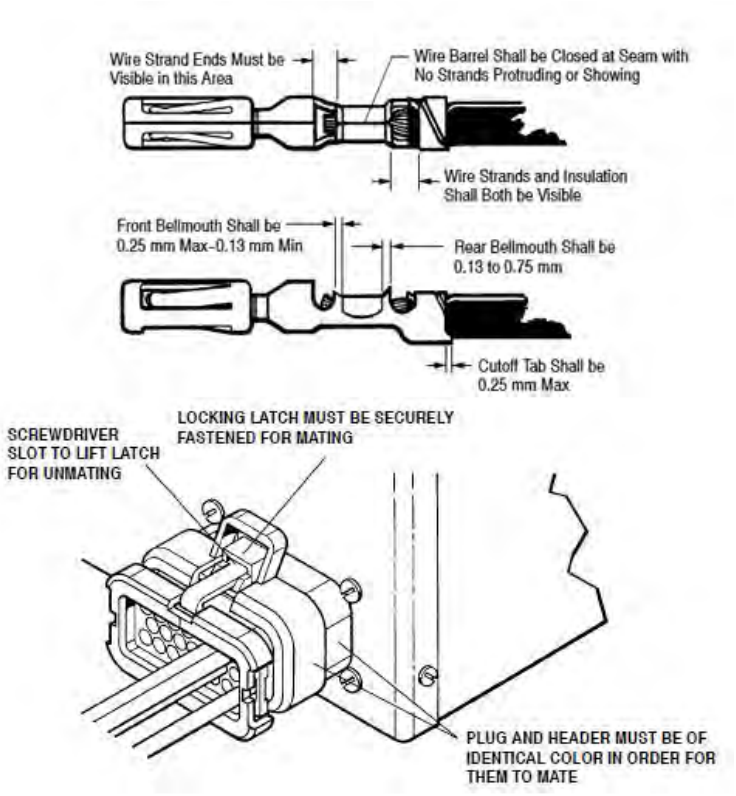

Refer to AMP Application Specification 114-16016 for more detailed information on connectors and cable recommendations.

Ordering codes for the AMPSEAL connectors, crimps and tools are listed in Section *Accessories*.

Epec Oy reserves all rights for improvements without prior notice

8.4 Cabling

8.4.1 System Topologies

Generally, cabling should be properly designed and documented to help the initial assembly and maintenance.
It is highly recommended to mark each cable on both ends to avoid confusion and errors.

The cables must be run in a safe route along the machine frame.
When routing cables, avoid interfering objects and pay particular attention to moving parts of the machine.
It is also good to minimize the amount of the connection points of the cable harness to maximize reliability.
Also, all valid safety instructions should be observed when coupling.

- The control units are connected with each other using standardized CAN bus.
- The idea of the Epec embedded control system, is that all the control units are installed close to sensors, encoders and other equipment connected to them.
    - This way the amount of the traffic on the CAN bus is minimized and connections can be made using short wires.

Termination resistors

- Generally, the bus cable is terminated at both ends with termination resistors (ISO 11898:1993).
    - In Epec 5050, there are two different types to connect terminal resistor:
        - In CAN1, termination resistor can be connected internally as shown in the figure Example1 below
        - In all the CANs (CAN1, CAN2, CAN3 and CAN4), the termination resistor can be external

The cable lengths presented here are approximates. Actual cable lengths also depend on the cable quality, the cable type and also on the machine environment (possible interference).

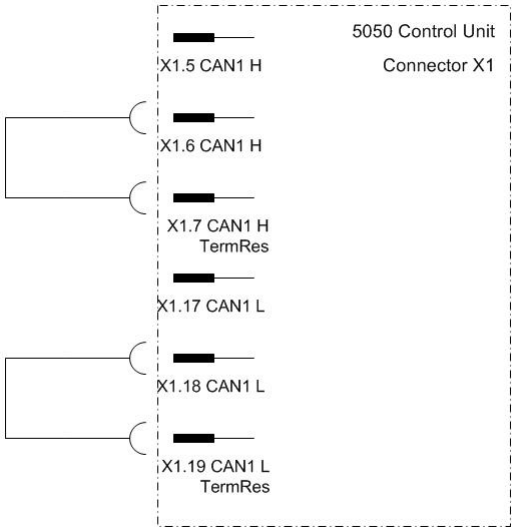

Example1. Termination resistor connection in CAN1

Epec Oy reserves all rights for improvements without prior notice

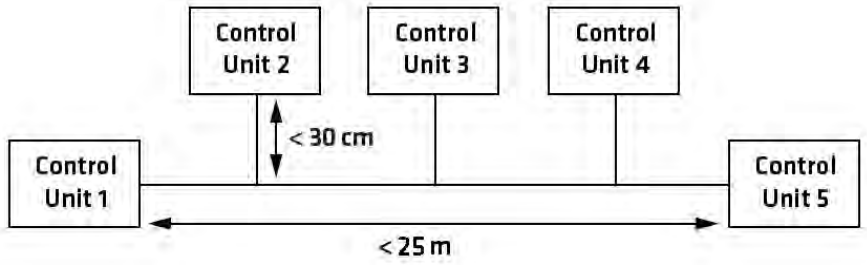

Example 2. Control system topology in theory with maximum bus speed (1000 kbit/s); Control Units in traditional bus arrangement. For more information about the bus speeds, refer to CiA DS-102 standard.

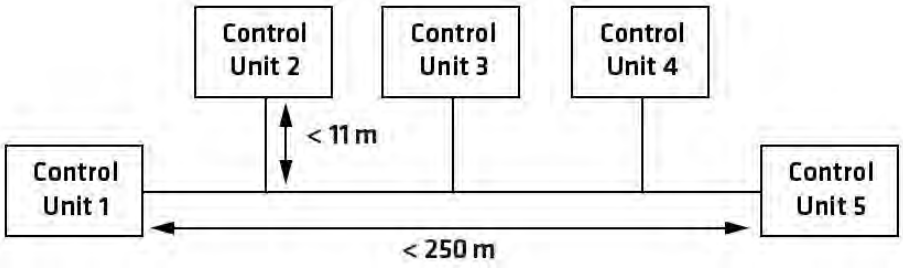

Example 3. Control system topology in theory with 250 kbit/s bus speed; Control Units in traditional bus arrangement. For more information about the bus speeds, refer to CiA DS-102 standard.



Example 4. The usage of the termination resistor (TR) in a conventional bus. The maximum recommended bus length is directly dependent on the bus speed. In theory, the maximum length with the maximum speed can be up to 25 meters. If the bus speed is lower, the length can be extended. The maximum length of the bus depends on the bus speed. For more information about the bus speeds, see the table below / refer to CiA DS-102 standard.

The following table shows some baud rates in general purpose CAN bus networks as well as the maximum bus length for a given baud rate, that CAN in Automation (CiA) international users and manufacturers group has recommended to be used. For more information, refer to CiA DS-102 standard.

CAN bus baud rates and bus lengths according to CiA DS-102 standard

Baudrate	Bus length
1 Mbits/s	25 m
800 kbits/s	50 m
500 kbits/s	100 m
250 kbits/s	250 m
125 kbits/s	500 m
50 kbits/s	1000 m

Epec Oy reserves all rights for improvements without prior notice

8.4.2 CAN Bus

The CAN bus cable is the neural backbone of the whole system and should be designed and constructed with extra care.

- In all Epec 5050 control units, the bus connections can be found in grey AMP 35 pin connector (connector1).
- The control unit's CAN1 is equipped with double pins that enables cabling without branching the wire harness
- For information about the CAN bus lengths and baud rates, refer to section System Topologies.

Cable

- It is recommended to use high quality and twisted (approx. 1 round/ 1 inch) CAN bus cable.
- Normal UTP (Unshielded Twisted Pairs) cable is well suited for distances under approximately 10 meters.
- In longer distances, and especially if there is possibility for electromagnetic interference, it is highly recommended to use shielded and twisted cable for CAN bus, also for shorter distances.
- To avoid electromagnetic interference (EMI), locate the bus cable as far away from high-current carrying cables as possible. Generally, the amount of the connections and connectors should be minimized to maximize security; also all connections should be done carefully.
- The shield grounding must be done only in one end of the cable

Cable shield

Connection example when there is a GND pin available in the control unit:

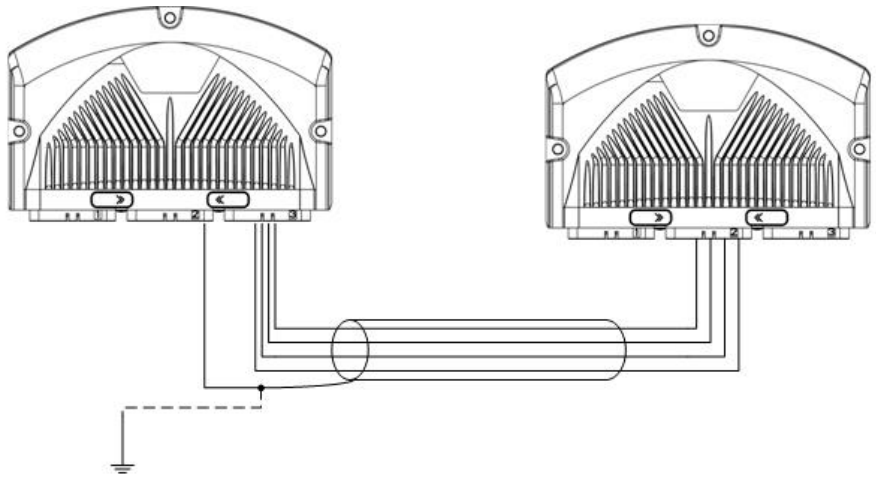

Epec Oy reserves all rights for improvements without prior notice

Connection example when there is not a GND pin available in the control unit:

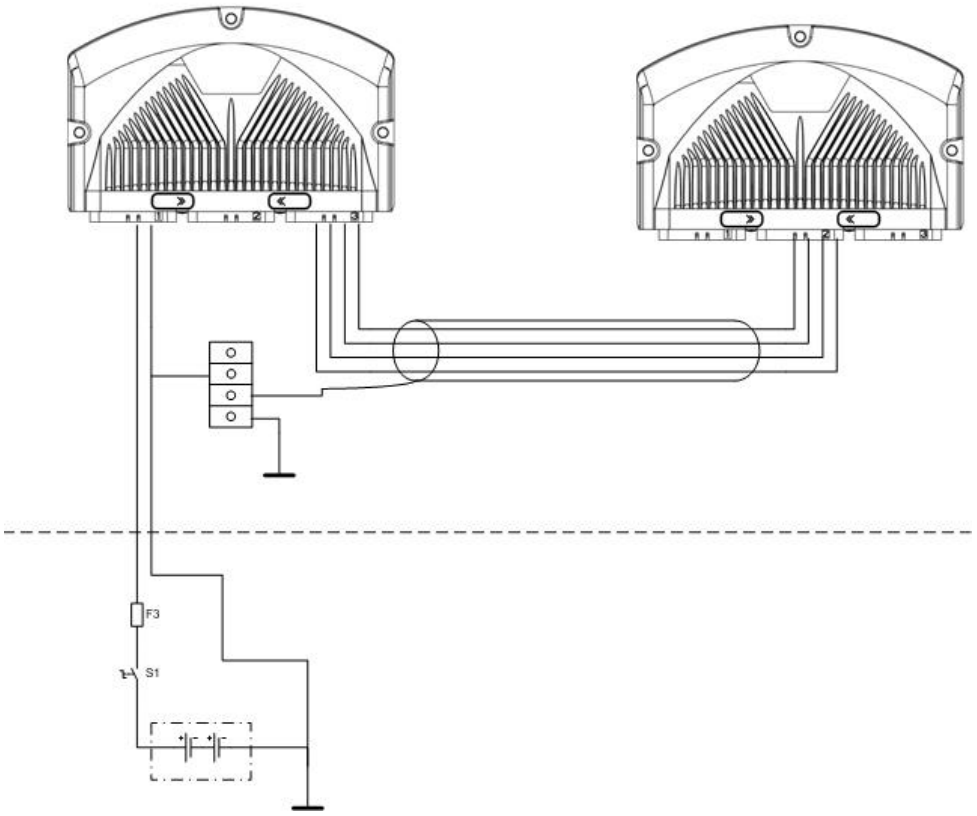

Epec Oy reserves all rights for improvements without prior notice

8.4.3 I/O Cabling

Closed circuit loops are always recommended and mandatory when you are using DO or PWM pin as an input.
Closed circuit loop means that the power supply for the sensor must return to the same power group, see the figures below.

When measuring current (mA), the sensor connected to 5050 unit's AI/DI pin must not be powered up before the 5050 control unit is operational. Otherwise the sensor's input signal is not received correctly.

To ensure correct measurement, reserve separate GND pin(s) for AI pin(s) and don't use it/them for any other purposes. See cabling example below.

- The cabling for encoders etc. is in many cases supplied together with them.
- In many cases, very simple basic cable may be used, e.g. automobile R2 cable (0,5 or 1,0) by NK Cables.
- Dimensions of the cable should be appropriate for AMP contacts (so that crimping is possible).
    - Refer to AMPSEAL table (in section *Accessories*) for dimensions.
    - Take extra care for protecting the cables against physical wear and damage.
- Normally, only one wire can be connected to one AMPSEAL connector pin. However, if more than one wire has to be connected to one connector pin, it has to be connected by branch wiring.
- Some voltage inputs use relatively low voltages.
    - Consider using shielded cables for these encoders etc. especially for longer distances to increase safety
- Using shielded cable is recommended also in joystick connections.

The following figures describe the closed loop wiring:

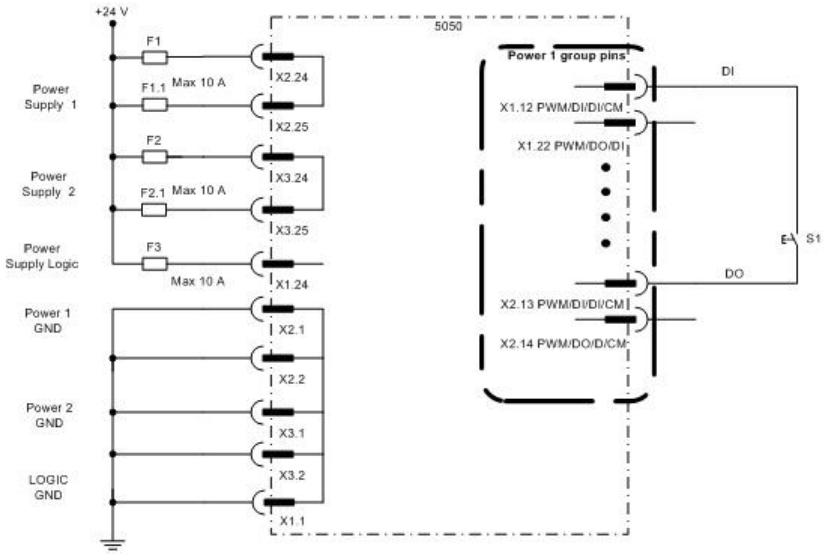

Epec Oy reserves all rights for improvements without prior notice

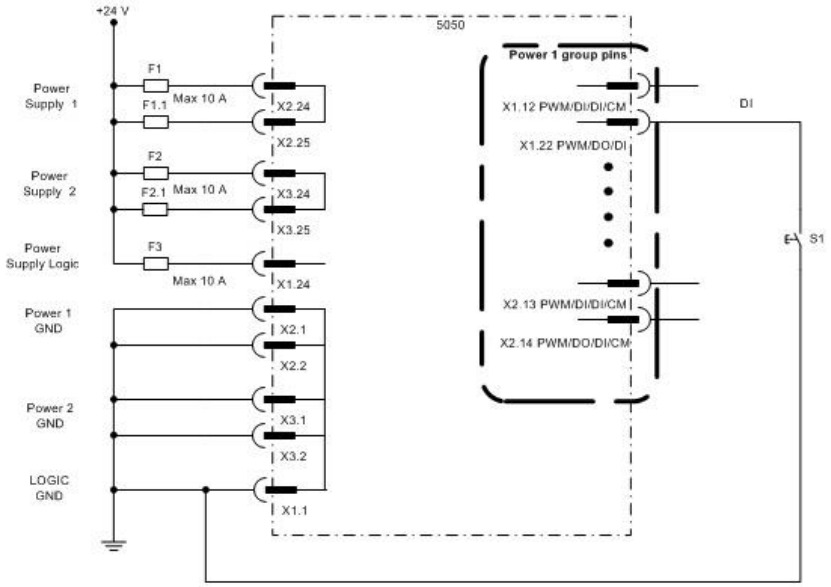

Do not connect the closed circuit loop as shown in the following figure:

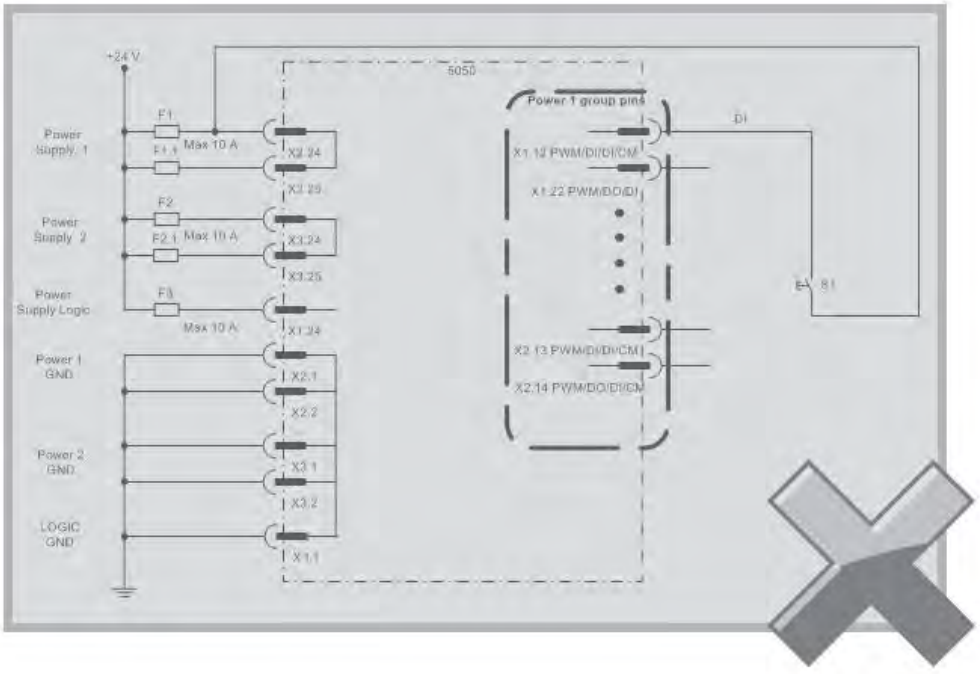

Epec Oy reserves all rights for improvements without prior notice

The following figure shows four different ways to connect closed circuit loop through the control unit:

- Proportional valve (on the left)
- ON/OFF valve
- Joystick
- ON/OFF switch (on the right)

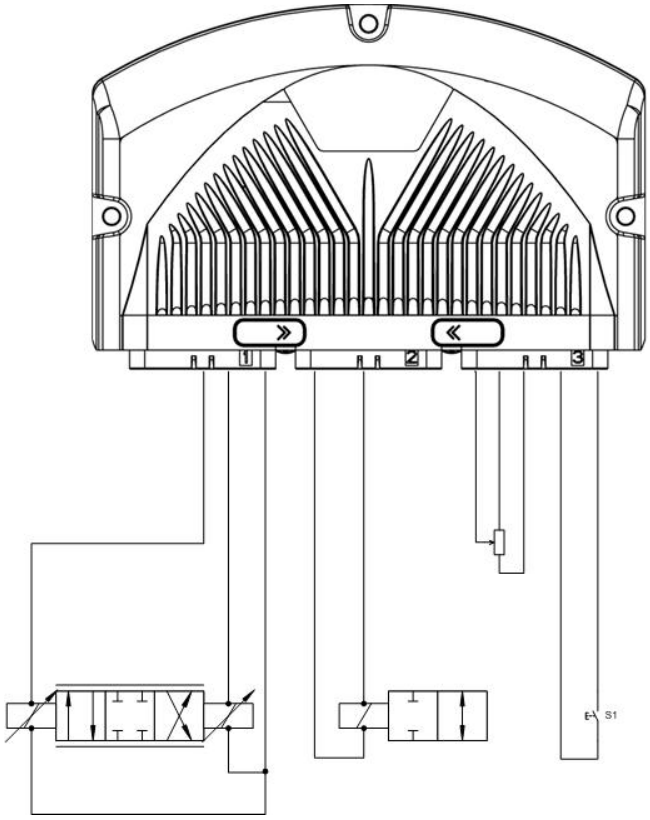

Epec Oy reserves all rights for improvements without prior notice

The following figure shows three different ways to connect open circuit loop (from the control unit's point of view):

- Proportional valve (on the left)
- ON/OFF valve
- ON/OFF switch (on the right)

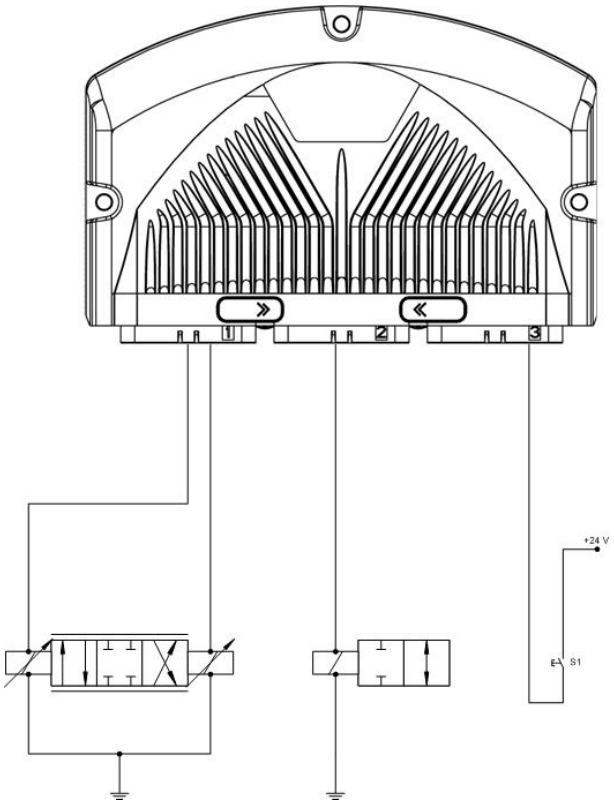

AI - GND cabling examples (use separate GND pin for AI pins):

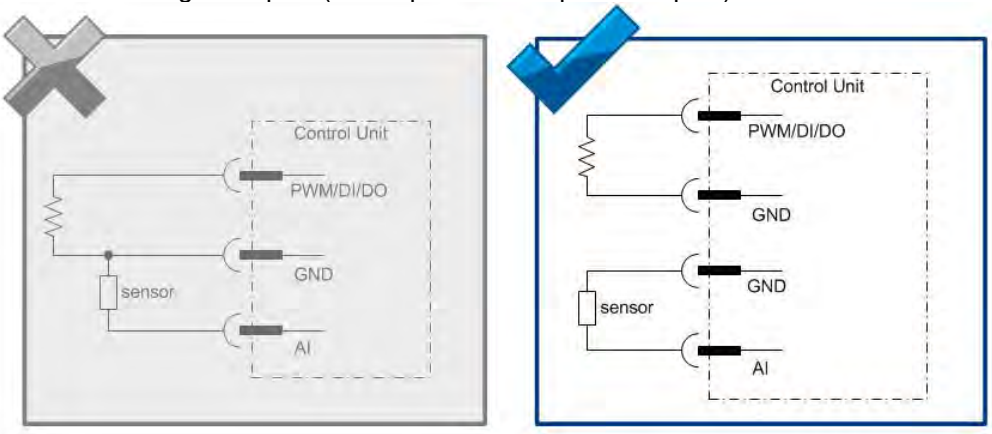

- All sensors and encoders must be wired according to the closed-loop principle, i.e. the power for the sensors and encoders is supplied by the control unit they are connected to. This way, it is possible to avoid potential harmful differences, so the MOSFET driven output power switching operates properly.

When designing the sensor and encoder connections, observe single-point grounding. Each control unit connector has several GND pins which should be used.
Refer to section *Power supply pins and limitations* for accurate pin allocation of connectors.

Epec Oy reserves all rights for improvements without prior notice

8.4.4 Ethernet Cabling



In order that the electromagnetic interference (EMI) would not effect the data transfer, the installation of the cable should be done as close as possible to the body of the machine.

It is recommended to wire the cable under the shelter of mechanical hits if the installation environment makes it possible.

The cable must be installed as far away as possible from other cables with high power.

The maximum length of a connection is 100 meters.

- In all Epec 5050 control units the Ethernet connections can be found in the grey AMP 35 pin connector (connector1).
- This Ethernet connection is based on 10BASE-T/100BASE-T connection where two twisted pairs are used.
- AMP35 connector is not a standard connecting format and to get the best operation reliability the following issues should be considered in circuitry and installation; type of the used cable, connecting the cable and the installation method.

Cable

If the installation environment requires a cable that takes heat and low temperature, the minimum demand for the cable is under 20 m with connection Outdoor UTP Cat5E 4Pairs (Water Blocking / UV Resistant).
For longer connections it is recommended to use cable Outdoor UTP Cat6 4Pairs (Water blocking / UV Resistant), similar to it or better.

- (SFTP = Shielded Foiled Twisted Pair)
- (FTP = Foiled Twisted Pair)
- (STP = Shielded Twisted Pair)
- (UTP= Unshielded Twisted Pair)

Ethernet cable connection with Epec 5050 control unit:

AMP35 pin	RJ45 male pin	T568B Pair	Color (according to T568B standard)	RJ45 male connector (front)
27 (rxd+)	3 (rxd+)	3	White/green	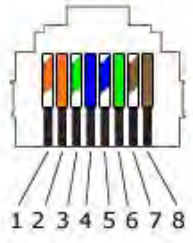
25 (txd+)	1 (txd+)	2	White/orange	
28 (rxd-)	6 (rxd-)	3	Green	
26 (txd-)	2 (txd-)	2	Orange	
	4	1	Blue	
	5	1	White/blue	
	7	4	White/brown	
	8	4	Brown	

Epec Oy reserves all rights for improvements without prior notice

8.4.5 Power Supply

The maximum continuous current per pin is 10 A.

- The nominal operating voltage for Epec modules is 12 and 24 VDC. The full operating range is 8,3 - 36VDC.
- See section *Power supply pins and limitations* for accurate pin allocation of the connectors when using Epec 5050 control unit.
- Single point grounding should be used for power supply for all the control units.

Power supply's wiring example when max 10 A is needed from Power 1 and Power 2:

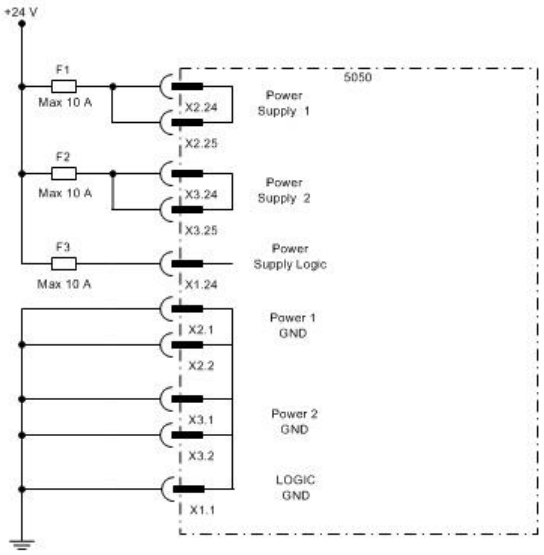

Power supply's wiring example when max 14 A is needed from Power 1 and max 10 A from Power 2:

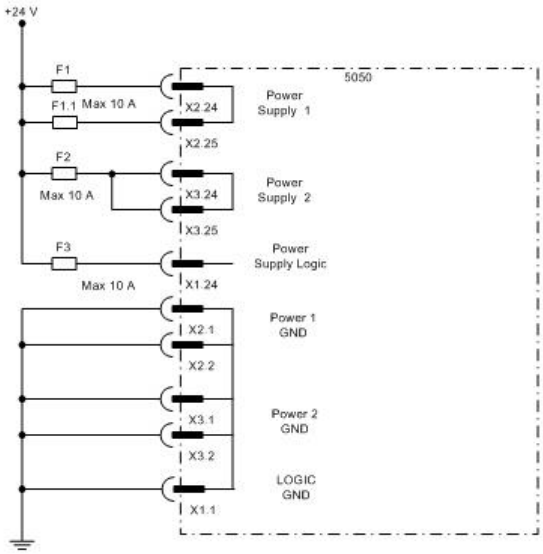

Epec Oy reserves all rights for improvements without prior notice

Power supply's wiring example when max 14 A is needed from Power 1 and max 14 A from Power 2:

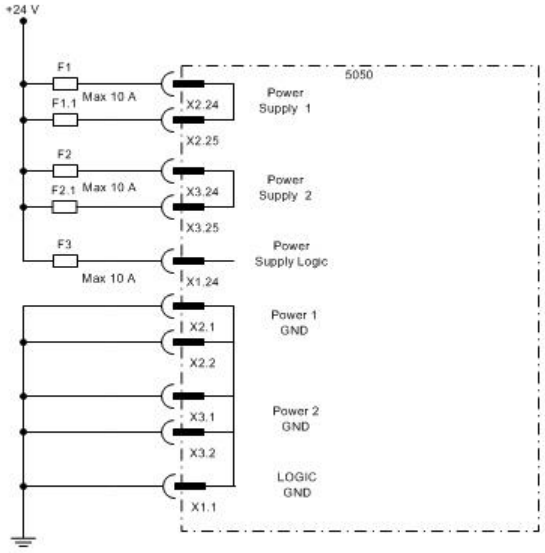

Power supply's wiring example when max 10 A is needed from Power 1 and max 14 A from Power 2:

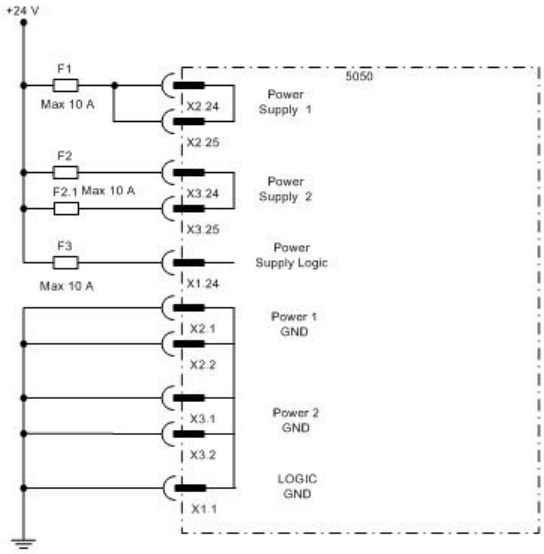

Epec Oy reserves all rights for improvements without prior notice

Power supply's wiring when using one battery:

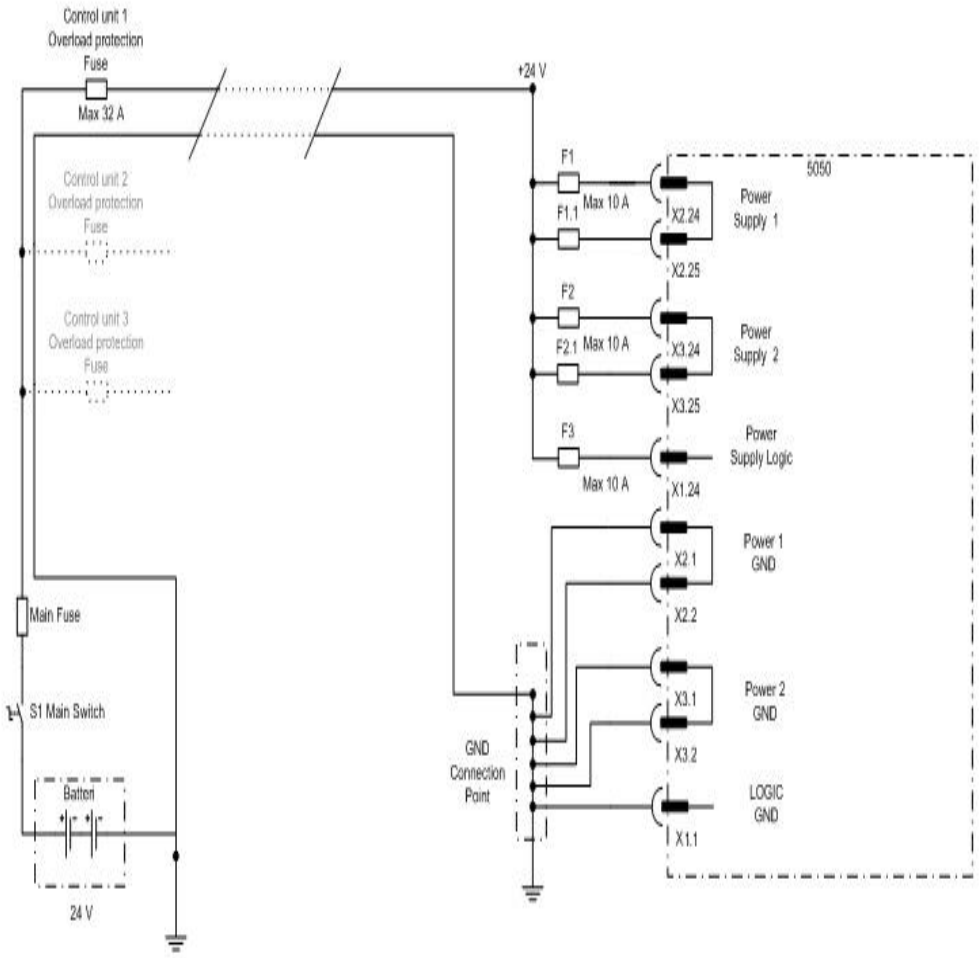

Epec Oy reserves all rights for improvements without prior notice

Power supply's wiring when using two batteries:

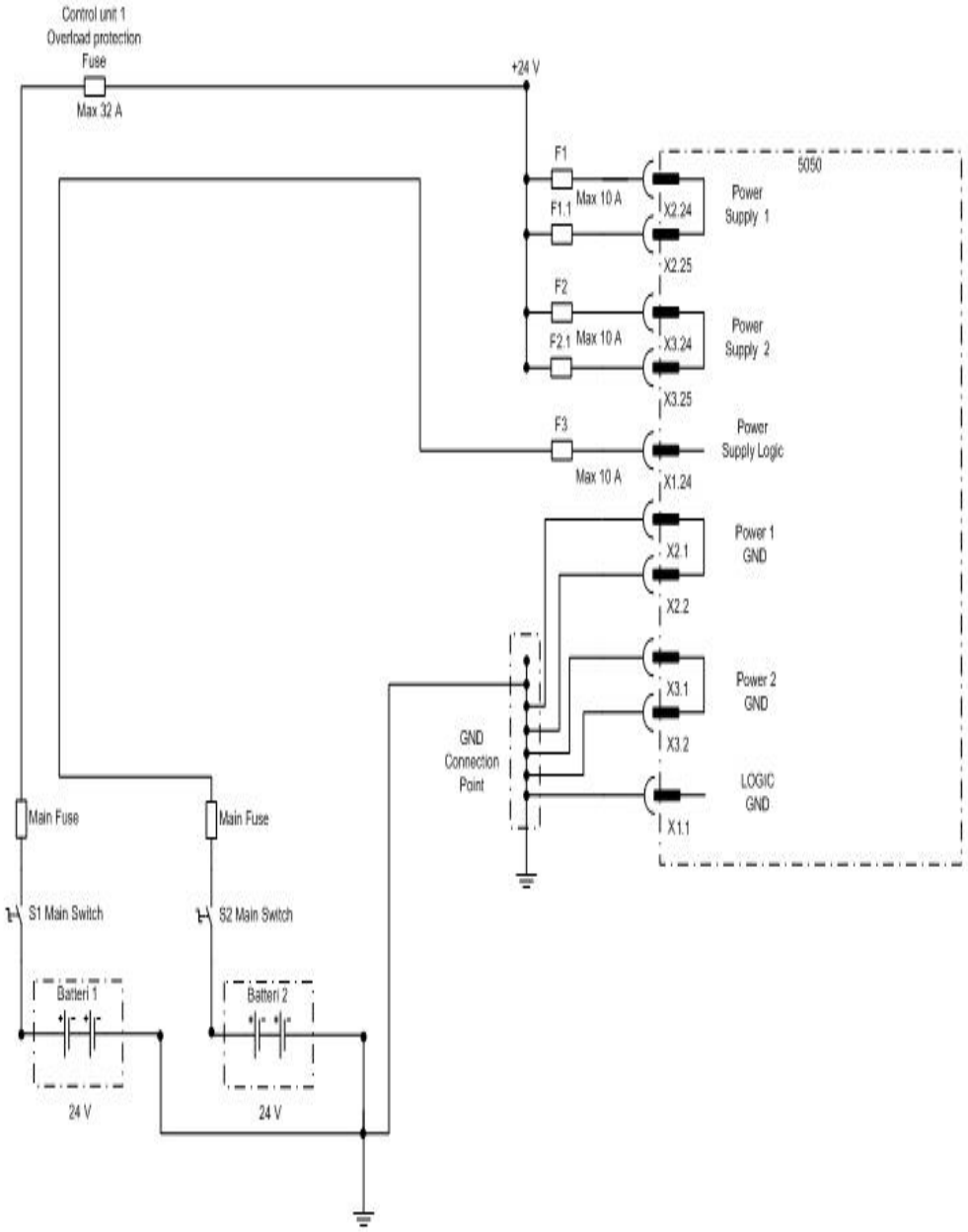

Epec Oy reserves all rights for improvements without prior notice

8.5 Welding



Welding causes some high current flows and voltage peaks in the machine. It should be noted that the electronics of the control system may be damaged, if the welding current can get through the control unit itself.
So, when welding, it should be taken care to prevent high currents from going through the control units or through the CAN bus.

Follow carefully the following instructions.



Disconnect all the connectors from the control units before welding.



Generally, even if the control system power is disconnected, welding should be done carefully and by following appropriate safety measures. Welding grounding should be connected close to the welding point to avoid long distance high current flow through machine frame.

Epec Oy reserves all rights for improvements without prior notice

8.6 System Examples

Loading machine

Cabin control unit
- reads the joysticks and switches
- controls the boom and bucket
- controls the gearing
- controls the steering and brakes
- controls the lights

Rear frame control unit
- controls the engine
- controls the hydraulic pumps
- controls the rear lights

Tilt sensors
- measures the frame position
- measures the loader position

Display
- gauge
- diagnostics
- software updating

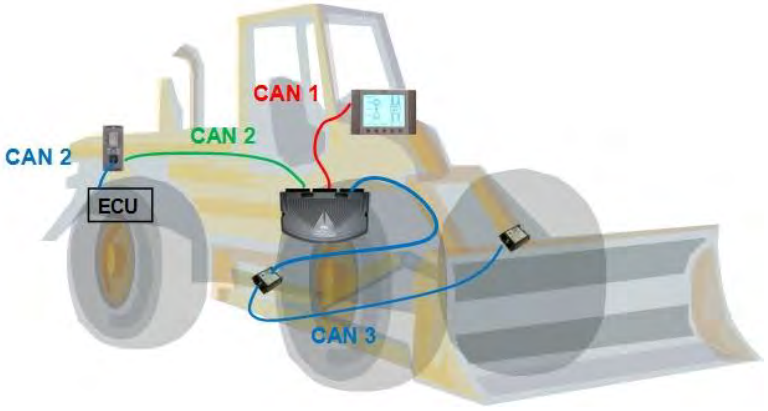

Dumper

Cabin control unit
- reads the joysticks and switches
- controls the engine
- controls the gearing
- controls the driveshaft brake
- controls the steering and brakes
- controls the dump box

Display
- remote connection
- positioning
- gauge
- diagnostics
- software updating

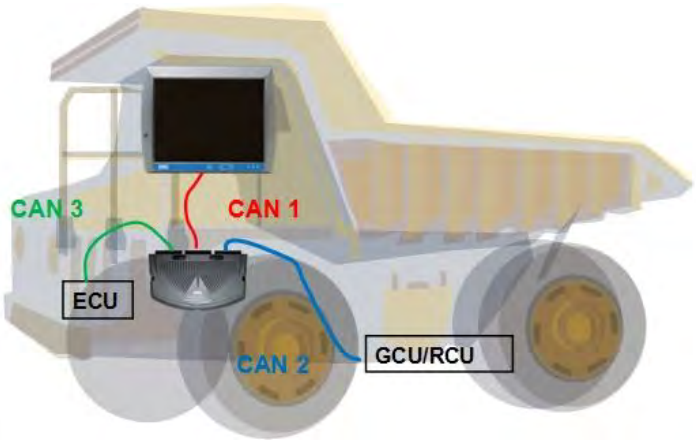

Epec Oy reserves all rights for improvements without prior notice

Landfill compactor

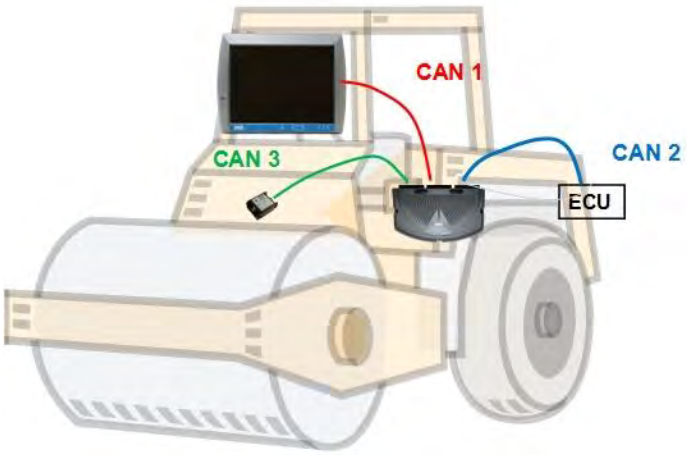

Cabin control unit
- reads the joysticks and switches
- controls the engine
- controls the transmission
- controls the steering
- controls the lights

Tamping sensors
- measures the degree of concentration

Display
- remote connection
- positioning
- gauge
- diagnostics
- software updating

Backhoe

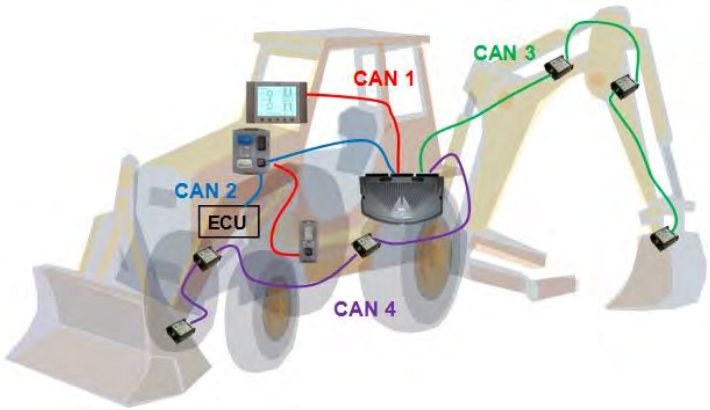

Cabin control unit
- reads the joysticks and switches
- controls the excavator
- controls the roof lights
- booms' position calculation

Engine control unit
- controls the engine
- controls the front loader
- reads the fluid pressures and temperatures

Gearing control unit
- controls the gearing
- controls the suspension

Tilt sensors
- measures the frame position
- measures the excavator and front loader positions

Display
- gauge
- diagnostics
- software updating

Epec Oy reserves all rights for improvements without prior notice

8.7 Accessories and Ordering Codes

Related products

Product	Epec ordering code	Epec data sheet code
Measuring adapter	E3003510	MAN000512
CAN adapter	E3003509	MAN000513
3500 CAN Adapter Box	E3003500	MAN000385
External termination resistor	E30901252	-
Kvaser CAN Card	E0000038	-

AMPSEAL Connectors

Epec uses gold plated, locked and sealed AMPSEAL heavy duty connectors for all Epec CAN Control Unit Family products to ensure endurance under extreme conditions.

- All connectors are mechanically keyed to mate only with identical colors

AMPSEAL product	TE Connectivity ordering code	Epec ordering code
AMP 35 pin grey plug (female)	776164-4	KX0351
AMP35 FEM (grey) - flying leads (2 m)		E30902451
Power supply & CAN cable for 3000, 4000 and 5000 series control units (2 m, AMP35 - AMP8 (Power & 2 x CAN), 29 x flying leads (other I/O pins))		E30902491
AMP 35 pin blue plug (female)	776164-5	KX0352
AMP35 FEM (blue) - flying leads (2 m)		E30902453
AMP 35 pin black plug (female)	776164-1	KX0353
AMP35 FEM (black) - flying leads (2 m)		E30902452
Contact for AMP plug assembly	770854-3	KX0010
Crimping tool	58529-1	TT0018
Wire relief for a connector	776463-1	KX0354

AMPSEAL cable dimensions

Size		Insulation diameter range	Strip length ±0,4
mm²	AWG		
0,5	20	1,7 to 2,7	5,1
0,8	18		
1,4	16		
1,5	---	2,2 to 2,4	

Typical hand crimping tool e.g.: AMP Procrimper 58529-1 (TE Connectivity), Epec ordering code TT0018

Epec Oy reserves all rights for improvements without prior notice