Epec 4602 Control Unit

Technical Manual and Cabling Instructions

MAN000632



Functional version
4602-10

Document version history

Date	Notes
30.06.2016	First released version

Classification: Public

© Epec Oy

Table of Contents

1 PREFACE 4
1.1 Use of Symbols 4
1.2 Basic Skills Required 5
1.3 Safety Guidelines 6
1.4 Warranty 7
1.5 Limited Liability 8
1.6 Environmental Statement 9

2 PRODUCT OVERVIEW 10

3 TECHNICAL DATA 12

4 INPUT / OUTPUT SPECIFICATIONS 14
4.1 I/O List 14
4.2 Configurable I/Os 18
4.3 PWM/DI/DO_Type051 19
4.3.1 Output (PWM/DO) 19
4.3.2 Input (DI) 19
4.3.3 Functional Block Diagram 21
4.4 PWM/DI/DO_Type073_1 22
4.4.1 Output (PWM/DO) 22
4.4.2 Input (DI) 22
4.4.3 Functional block diagram 24
4.5 FB/AI_Type061_2 25
4.5.1 Functional Block Diagram 25
4.5.2 DO/DI (sinking)_Type074_1 26
4.5.3 Output 26
4.5.4 Input 26
4.5.5 Functional block diagram 27
4.6 Digital Input / Pulse Input 28
4.6.1 DI/PI_Type059_1 29
4.6.2 DI/PI_Type075_1 31
4.6.3 DI/PI_Type075_2 33
4.7 Analog Input / Digital Input 35
4.7.1 AI/DI_Type061_3 36
4.7.2 AI/DI_Type064_3 37
4.7.3 AI/DI_Type071_1 39
4.8 +5V REF_Type041_4 41
4.8.1 Protection Features 41
4.8.2 Voltage Monitoring 41
4.8.3 Functional Block Diagram 42
4.8.4 Diagnostics 42
4.9 Power Supply 44
4.9.1 Overvoltage Protection 44
4.9.2 Power Consumption 44

5 INTERNAL DIAGNOSTICS 46
5.1 Error Log 46

6 APPROVALS AND SAFETY 47
6.1 EMC Tests 47
6.2 Environmental Tests 52

7 MECHANICS AND CABLING 54
7.1 Plugging and unplugging the connectors 54
7.2 Cabling 56

Epec Oy reserves all rights for improvements without prior notice

7.2.1 System Topologies *56*
7.2.2 CAN Bus Cabling *58*
7.2.3 I/O Cabling *61*
7.3 Welding *62*
7.4 System Examples *63*
7.5 Accessories and Ordering Codes *65*

Epec Oy reserves all rights for improvements without prior notice

Epec Oy

Postal address
PL/P.O.Box 194
FIN-60101 Seinäjoki, Finland

Phone
+358-(0)20-7608 111

Internet
www.epec.fi

1 PREFACE

1.1 Use of Symbols

This manual uses the following symbols to point out important information or safety instructions:



The information icon indicates important information and issues to be noted for the reader.



The caution icon indicates very important information or a warning. If the advices are ignored, it can result in personal injury or damage to software or equipment.



The (electrical) warning icon indicates a hazard which could cause an electrical danger and/or a personal injury.

This product uses the following symbols to point out important information or safety instructions:



CE compatibility
This symbol indicates that the product complies with the requirements set in the CE Standard.



WEEE symbol
This symbol indicates that the product must be sent to separate collection facilities for recovery and recycling when the end-user wishes to discard the product.



E17 Approval
This symbol indicates that the product is certified with normal automotive (E17) EMC (electromagnetic compatibility) standards.

Epec Oy reserves all rights for improvements without prior notice

1.2 Basic Skills Required

The user of this document must have basic knowledge of machine controlling, CAN communication, PLCopen programming according to IEC61131-1 and should have skills to use CODESYS 2.3/3.5 programming environment.

Refer to CODESYS 2.3/3.5 manual for further information concerning the programming environment and required installations.

Refer to CAN and CANopen documentation from CAN in Automation (CiA) for further information on communication issues.

Epec Oy reserves all rights for improvements without prior notice

Epec Oy

Postal address
PL/P.O.Box 194
FIN-60101 Seinäjoki, Finland

Phone
+358-(0)20-7608 111

Internet
www.epec.fi

1.3 Safety Guidelines

The user of this documentation should follow general machine safety guidelines, directives and regulation appropriate to his/her country or market area.

A separate safety analysis is always recommended for the machine and its control system. The features of this product should be well documented in machine and control system documents so that the machine operator has the right information how to operate the machine correctly and safely.

This product is designed to be used only for machine controlling purposes. The manufacturer does not assume any responsibility for this product being fit for any particular application, unless otherwise expressly stated in writing by the manufacturer.

This product complies with those certifications and standards that are listed below. The manufacturer does not guarantee that this product complies any other certification, standard or test than listed below.

This product is not field serviceable, so it should not be opened at any situation.

External fuses should be installed for the product or the system power supply.

The system should be designed and constructed according to the Epec general mounting and cabling instruction document.

Epec Oy reserves a right to improve its products without a further notice.

Epec Oy reserves all rights for improvements without prior notice

Epec Oy

Postal address
PL/P.O.Box 194
FIN-60101 Seinäjoki, Finland

Phone
+358-(0)20-7608 111

Internet
www.epec.fi

1.4 Warranty

The manufacturer does not assume any responsibility for the products being fit for any particular purpose, unless otherwise expressly stated in writing by the manufacturer.

The manufacturer gives the warranty of twelve (12) months to the products and thereto related firmware from commissioning or eighteen (18) months from the date of delivery of the products which ever occurs first.

The manufacturer is during the warranty period responsible for defects in the products and thereto related firmware resulting from faults in material, design or workmanship. The manufacturer's only obligation under this warranty is to, at its sole discretion, either to replace the products and/or thereto related firmware or to repair the defective products. The manufacturer shall, at its sole option, repair the products at its manufactory in Seinäjoki, Finland.

The warranty does not cover any costs related to removing or fastening of devices related to the products. Neither does the warranty cover the expenses of sending devices to or from the manufacturer for repairs. The warranty does not cover possible expenses relating to travelling, accommodation, daily benefits, etc. of installers.

The warranty becomes null and void if the buyer and/or a third party alters the products or the firmware in any way or if they are not used in accordance with the Manufacturer's operating instructions.

All claims with respect to defects in the products shall be made to the manufacturer without delay and no later than on the seventh (7th) day after the defect has been or should have been discovered by the buyer. The manufacturer strives to reply to the claim in writing within two (2) weeks from the receipt of the claim. The buyer shall attach to the claim a possible error report or equivalent explanation of the grounds for the claim.

The manufacturer gives no other warranties whatsoever for the products than the warranty set out in this section and thus the warranty given in this section sets forth the warranty given by the manufacturer in its entirety.

Epec Oy reserves all rights for improvements without prior notice

1.5 Limited Liability

The manufacturer shall under no circumstances be liable for loss of production, loss of profit, loss of use or any other consequential damages and/or indirect losses, whatever their cause may be. In case claims based on product liability are brought against the Manufacturer for which claims the manufacturer may be liable, the manufacturer's liability is limited to the extent normally covered under normal product liability insurances.

The buyer shall compensate the manufacturer to the extent that the manufacturer might be liable to pay damages as a result of claims based on product liability according to paragraph above.

Epec Oy reserves all rights for improvements without prior notice

Epec Oy
Postal address
PL/P.O.Box 194
FIN-60101 Seinäjoki, Finland
Phone
+358-(0)20-7608 111
Internet
www.epec.fi

1.6 Environmental Statement

The manufacturer uses ISO14001 environmental certified processes and materials to manufacture products. The manufacturer undertakes to arrange for the recycling and scrapping of the products that are returned to the manufacturer by the buyer and/or the products that are received by the Manufacturer in connection with maintenance services performed as a result of that repairing of the products is deemed by the manufacturer to be inappropriate.

The manufacturer will charge a scrapping fee from the buyer according to the manufacturer's price list in force from time to time. No scrapping fee will, however, be charged for products that are received by the manufacturer during the warranty period.

WEEE
This product complies with the European Community Directive 2012/19/EU on waste electrical and electronic equipment (WEEE) encouraging and setting specific criteria for the collection, handling and recycling of electric and electronic waste.

RoHS
This product complies with the European Community Directive 2011/65/EU (RoHS) restricting hazardous substances such as quicksilver and lead in electrical and electronic equipment.

Epec Oy reserves all rights for improvements without prior notice

2 PRODUCT OVERVIEW



Epec 4602 Control Unit is a compact and robust multifunction controller with 16-bit processor and high calculating power. Epec 4000 product platform is fully compatible to the existing Epec product portfolio. Some of the advances of the Epec 4602 Control Unit are listed below.

Multifunctional Efficiency

- A multifunction controller
  - 16/32 bit processor
  - high calculating power
- Can be used used in a CAN control unit system as a controller with different kinds of sensors and actuators, such as
  - proportional valves and
  - electro-hydraulic components
- High current carrying capacity
- Several signal ground pins
- Provides control system solutions for both centralized and distributed intelligence systems
- Fully compatible with the existing Epec product portfolio

Mechanics & hardware

- Robust, light and leak proof aluminum cover has been widely tested against different chemicals and environmental conditions
- The shape of the casing works to protect the electronics inside against mechanical wear.
- Three point anchorage confirms firm mounting also on irregular surfaces
- Signal LED for quick status check and fault detection
- Equipped with gold plated, heavy duty AMPSEAL connectors
- Each connector is color coded and mechanically keyed to fit only to the correct, corresponding place
- Made in Finland

Versatile I/O capabilities

- Total of 68 I/O pins
- Most pins have multipurpose features
- All I/O pins are equipped with a short-circuit protection
- Some pins with an input feature have a programmable pull-up selection
- Many of the pins have configurable features such as input impedance

Epec Oy reserves all rights for improvements without prior notice

Application programming

- Application downloading is possible through CAN bus
- Epec products are based on PLCopen and CANopen®, which make them easily scalable to meet requirements for both small and large machines
- Open I/O and communication interface, thus making it possible to connect
    - sensors,
    - actuators,
    - joysticks, and
    - other devices

  from other manufacturers to optimize the whole machine environment, both technically and ergonomically.
- Internal diagnostics which makes it possible to
    - detect e.g. overvoltage and overtemperature alarms and
    - program customized log applications

Epec Oy reserves all rights for improvements without prior notice

3 TECHNICAL DATA

Processor	16/32 bit CPU, 100 MHz
Memory	Flash memory: total 1600 kbyte RAM memory: 138 kbyte (112 kbyte for PLCopen application variables) Non-volatile memory: 8 kbyte PLCopen application size up to 768 kbyte
Power	Nominal supply voltage 12/24 VDC systems (8,5 ... 33 VDC) Idle power consumption 1,5 W (+24 VDC, no external load) Undervoltage reset 7,5 V Overvoltage protection typical 33...70 VDC (transient 123 V)
REF voltage outputs	+5 V
Diagnostics	Signal LED (green/red) Supply voltage Unit temperature REF voltage monitoring Internal voltage monitoring Software cycle time Error log
Protection functions	Overvoltage protection Short-circuit protection for outputs
Programming	CODESYS 2.3
Software installation	Download via CAN1
Protection class	IP67
Size / Outer dimensions	224,8 x 148,5 x 50 mm 8.819 x 5.827 x 1.969 in
Weight	0,93 kg 2.05 lbs
Case material	Aluminum / plastic
Operating temperature	-40... +85˚C -40...+185˚F
Storage temperature	-40... +85˚C -40...+185˚F
Connectors	3 x AMP35 (connector 1 grey, connector 2 black, connector 3 blue)
Communications / Interfaces	2 x CAN 2.0 B
REF pins total	2
GND pins total	20
I/O pins total	68

Epec Oy reserves all rights for improvements without prior notice

Outputs	16 x	PWM/DO/DI (sourcing, up to 3 A, PWM frequency by application)
	4 x	PWM/DO/DI (sourcing, up to 4 A, PWM frequency by application)
	4 x	DO/DI (sinking) (up to 4 A)
Inputs	2 x	AI/DI (0...37 V)
	14 x	AI/DI (0-5 V / 0-22 mA selection by application)
	4 x	AI/DI (0...5 V, pull-up to +5 V, pull-up resistance selection by application)
	10 x	FB/AI (0...2 A)
	12 x	DI/PI (pull-up / pull-down selection by application, threshold voltage 3,1 V)
	1 x	DI/PI (pull-up / pull-down selection by application, threshold voltage 2,5 V)
	1 x	DI/PI (pull-up / pull-down selection by application, threshold voltage 1,25 V)

Epec Oy reserves all rights for improvements without prior notice

Epec Oy

Postal address
PL/P.O.Box 194
FIN-60101 Seinäjoki, Finland

Phone
+358-(0)20-7608 111

Internet
www.epec.fi

4 INPUT / OUTPUT SPECIFICATIONS

4.1 I/O List

The three connectors are placed in the unit according to the following figure:

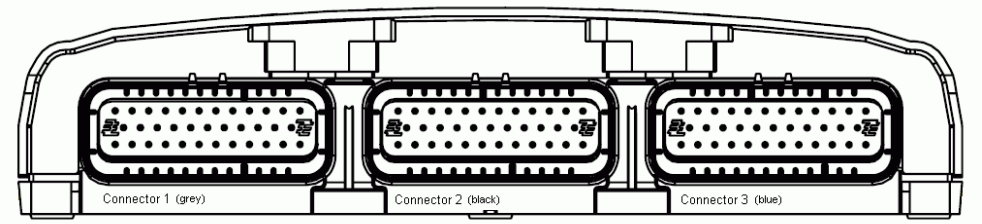

The following table lists the pins according to their pin number. Other columns offer quick information about the pin and links for more information.

The group column:
* **UPPER CASE CHARACTERS** indicate the output groups (the pins in the same group have the same configurations)

I/O table

Pin number	Pin type	Details	Group*	Current / Voltage	Information
First connector:					
X1.1	Supply GND				Supply GND connection
X1.2	Supply GND				Supply GND connection
X1.3	Supply GND				Supply GND connection
X1.4	CAN2H				
X1.5	CAN1H				
X1.6	CAN1H				
X1.7	CAN1H_TERMINATOR				
X1.8	GND				
X1.9	AI/DI_Type064_3	82 kΩ GND / 220 Ω GND		0-5 V / 0-22 mA	
X1.10	AI/DI_Type064_3	82 kΩ GND / 220 Ω GND		0-5 V / 0-22 mA	
X1.11	AI/DI_Type061_3	74,8 kΩ GND		0-37 V	
X1.12	AI/DI_Type061_3	74,8 kΩ GND		0-37 V	
X1.13	LOADER BSL	For factory use only			
X1.14	AI/DI_Type064_3	82 kΩ GND / 220 Ω GND		0-5 V / 0-22 mA	
X1.15	AI/DI_Type064_3	82 kΩ GND / 220 Ω GND		0-5 V / 0-22 mA	
X1.16	CAN2L				
X1.17	CAN1L				
X1.18	CAN1L				

Epec Oy reserves all rights for improvements without prior notice

X1.19	CAN1L_TERMINATOR				
X1.20	AI/DI_Type064_3	82 kΩ GND / 220 Ω GND		0-5 V / 0-22 mA	
X1.21	AI/DI_Type064_3	82 kΩ GND / 220 Ω GND		0-5 V / 0-22 mA	
X1.22	FB/AI_Type061_2	0,1 Ω GND		0-2 A	
X1.23	FB/AI_Type061_2	0,1 Ω GND		0-2 A	
X1.24	Power Supply				
X1.25	Power Supply				
X1.26	Power Supply				
X1.27	GND				
X1.28	PWM/DI/DO_Type051_5	10 kΩ GND	B	Nominal current 3 A	
X1.29	FB/AI_Type061_2	0,1 Ω GND		0-2 A	
X1.30	PWM/DI/DO_Type051_5	10 kΩ GND	B	Nominal current 3 A	
X1.31	PWM/DI/DO_Type051_5	10 kΩ GND	B	Nominal current 3 A	
X1.32	FB/AI_Type061_2	0,1 Ω GND		0-2 A	
X1.33	PWM/DI/DO_Type051_5	10 kΩ GND		Nominal current 3 A	
X1.34	PWM/DI/DO_Type051_5	10 kΩ GND		Nominal current 3 A	
X1.35	PWM/DI/DO_Type051_5	10 kΩ GND	E	Nominal current 3 A	
Second connector:					
X2.1	FB/AI_Type061_2	0,1 Ω GND		0-2 A	
X2.2	PWM/DI/DO_Type051_5	10 kΩ GND	E	Nominal current 3 A	
X2.3	GND				
X2.4	GND				
X2.5	REF +5V_Type041_4			+5 V 270 mA	Shared current with pin 3.20
X2.6	DI/PI_Type075_2	2,2 kΩ +5 V / 12,2 kΩ GND			
X2.7	DI/PI_Type059_1	2,2 kΩ +5 V / 12,2 kΩ GND			
X2.8	DI/PI_Type059_1	2,2 kΩ +5 V / 12,2 kΩ GND			
X2.9	DI/PI_Type059_1	2,2 kΩ +5 V / 12,2 kΩ GND			
X2.10	GND				
X2.11	GND				
X2.12	GND				
X2.13	FB/AI_Type061_2	0,1 Ω GND		0-2 A	
X2.14	PWM/DI/DO_Type051_5	10 kΩ GND	A	Nominal current 3 A	

Epec Oy reserves all rights for improvements without prior notice

X2.15	GND				
X2.16	GND				
X2.17	DI/PI_Type059_1	2,2 kΩ +5 V / 12,2 kΩ GND			
X2.18	FB/AI_Type061_2	0,1 Ω GND		0-2 A	
X2.19	AI/DI_Type064_3	82 kΩ GND / 220 Ω GND		0-5 V / 0-22 mA	
X2.20	AI/DI_Type064_3	82 kΩ GND / 220 Ω GND		0-5 V / 0-22 mA	
X2.21	AI/DI_Type064_3	82 kΩ GND / 220 Ω GND		0-5 V / 0-22 mA	
X2.22	AI/DI_Type064_3	82 kΩ GND / 220 Ω GND		0-5 V / 0-22 mA	
X2.23	FB/AI_Type061_2	0,1 Ω GND		0-2 A	
X2.24	DI/PI_Type075_1	2,2 kΩ +5V / 12,2 kΩ GND			
X2.25	DI/PI_Type059_1	2,2 kΩ +5 V / 12,2 kΩ GND			
X2.26	PWM/DI/DO_Type051_5	10 kΩ GND	E	Nominal current 3 A	
X2.27	FB/AI_Type061_2	0,1 Ω GND		0-2 A	
X2.28	PWM/DI/DO_Type051_5	10 kΩ GND	A	Nominal current 3 A	
X2.29	PWM/DI/DO_Type051_5	10 kΩ GND	A	Nominal current 3 A	
X2.30	PWM/DI/DO_Type051_5	10 kΩ GND	A	Nominal current 3 A	
X2.31	PWM/DI/DO_Type051_5	10 kΩ GND	D	Nominal current 3 A	
X2.32	FB/AI_Type061_2	0,1 Ω GND		0-2 A	
X2.33	PWM/DI/DO_Type051_5	10 kΩ GND	D	Nominal current 3 A	
X2.34	PWM/DI/DO_Type051_5	10 kΩ GND	C	Nominal current 3 A	
X2.35	PWM/DI/DO_Type051_5	10 kΩ GND		Nominal current 3 A	
Third connector:					
X3.1	PWM/DI/DO_Type073_1	10 kΩ GND		Nominal current 4 A	
X3.2	GND				
X3.3	GND				
X3.4	GND				
X3.5	DI/PI_Type059_1	2,2 kΩ +5 V / 12,2 kΩ GND			
X3.6	DI/PI_Type059_1	2,2 kΩ +5 V / 12,2 kΩ GND			
X3.7	DI/PI_Type059_1	2,2 kΩ +5 V / 12,2 kΩ GND			
X3.8	GND				
X3.9	GND				

Epec Oy reserves all rights for improvements without prior notice

X3.10	GND				
X3.11	GND				
X3.12	GND				
X3.13	PWM/DI/DO_Type073_1	10 kΩ GND	C	Nominal current 4 A	
X3.14	GND				
X3.15	GND				
X3.16	DI/PI_Type059_1	2,2 kΩ +5 V / 12,2 kΩ GND			
X3.17	DI/PI_Type059_1	2,2 kΩ +5 V / 12,2 kΩ GND			
X3.18	AI/DI_Type064_3	82 kΩ GND / 220 Ω GND		0-5 V / 0-22 mA	
X3.19	AI/DI_Type064_3	82 kΩ GND / 220 Ω GND		0-5 V / 0-22 mA	
X3.20	REF +5V_Type041_4			+5 V 270 mA	Shared current with pin 2.5
X3.21	AI/DI_Type064_3	82 kΩ GND / 220 Ω GND		0-5 V / 0-22 mA	
X3.22	AI/DI_Type064_3	82 kΩ GND / 220 Ω GND		0-5 V / 0-22 mA	
X3.23	GND				
X3.24	DI/PI_Type059_1	2,2 kΩ +5 V / 12,2 kΩ GND			
X3.25	DI/PI_Type059_1	2,2 kΩ +5 V / 12,2 kΩ GND			
X3.26	PWM/DI/DO_Type073_1	10 kΩ GND	C	Nominal current 4 A	
X3.27	PWM/DI/DO_Type073_1	10 kΩ GND	D	Nominal current 4 A	
X3.28	DO/DI (sinking)_Type074_1	10 kΩ GND		Nominal current 4 A	
X3.29	AI/DI_Type071_1	1,2 kΩ / 4,87 kΩ / 47 kΩ +5 V		0-5 V	
X3.30	AI/DI_Type071_1	1,2 kΩ / 4,87 kΩ / 47 kΩ +5 V		0-5 V	
X3.31	DO/DI (sinking)_Type074_1	10 kΩ GND		Nominal current 4 A	
X3.32	DO/DI (sinking)_Type074_1	10 kΩ GND		Nominal current 4 A	
X3.33	AI/DI_Type071_1	1,2 kΩ / 4,87 kΩ / 47 kΩ +5 V		0-5 V	
X3.34	DO/DI (sinking)_Type074_1	10 kΩ GND		Nominal current 4 A	
X3.35	AI/DI_Type071_1	1,2 kΩ / 4,87 kΩ / 47 kΩ +5 V		0-5 V	

Epec Oy reserves all rights for improvements without prior notice

Epec Oy

Postal address
PL/P.O.Box 194
FIN-60101 Seinäjoki, Finland

Phone
+358-(0)20-7608 111

Internet
www.epec.fi

4.2 Configurable I/Os

Control unit contains inputs and outputs or, in other words, I/O pins of many different types. There are, for example, outputs which source current and outputs which sink current. Furthermore, there are I/O pins which can be used as inputs or as outputs at the control of the application programmer.

The following table contains a summary of configurable I/O pins in Epec 4602 control unit:

Max Amount	Pin Type	Info	DI	AI	FB	PI	DO		PWM
							PNP (sourcing)	NPN (sinking)	
16	PWM/DI/DO_Type051	3 A	x				x		x
4	PWM/DI/DO_Type073_1	4 A	x				x		x
4	DI/DO (sinking)_Type074_1	4 A	x					x	
2	AI/DI_Type061_3	0...37 V	x	x					
14	AI/DI_Type064_3	0...5 V / 0...22 mA	x	x					
4	AI/DI_Type071_1	0...5 V, multiple pull-up resistor sizes	x	x					
10	FB/AI_Type061_2	0...2 A			x				
12	DI/PI_Type059_1	pull-up/pull-down	x			x			
1	DI/PI_Type075_1	thresh. 2,5 V	x			x			
1	DI/PI_Type075_2	thresh. 1,25 V	x			x			

Epec Oy reserves all rights for improvements without prior notice

4.3 PWM/DI/DO_Type051

4.3.1 Output (PWM/DO)

- These pins are current sourcing outputs.
  - In other words, pin connects the load to positive supply voltage.
- The application program can also simultaneously monitor the actual state of the pin.
  - This feature makes it possible to detect short circuits to the ground and short circuits to the power supply.
  - Open loads can not be detected because the internal load resistor is connected to the ground.

- These kind of outputs are also capable to generate pulse width modulated (PWM) output signals.
  - This feature is useful when driving proportionally controlled loads, e.g. proportional hydraulic valves.

- PWM frequencies can be configured under software control in groups of outputs.
  - The setting is done by a PWM channel, setting the frequency of one channel sets also the frequencies of all the other channels in the same group.
  - The groups are indicated with upper case characters in the pin table's Group column in section *I/O List*).

- These outputs have integrated protection features (overload, overcurrent)
- This kind of pin can be used with a step motor (for more information refer to the Programming and Libraries manual)



If you want to use current measuring, connect the other end of the load to the feedback pin.



It is recommended to use the function blocks in *DigitalOutputDiagnostics* library to protect and diagnose outputs when used as digital outputs. For more information, refer to *Epec Programming and Libraries Manual*.

4.3.2 Input (DI)

- This pin can be used as a digital input (DI)
- A pin of this type can also be used as an input by using the output state monitoring feature.
  - In this case, the output functionality of the pin must be kept in the off state.



Closed circuit loops are mandatory when you are using DO or PWM pin as an input.
Closed circuit loop means that the current from the control unit to the sensor must return to the same control unit, see the figures in section *I/O Cabling*.

Epec Oy reserves all rights for improvements without prior notice

Symbol	Parameter	Conditions	Min	Max	Units
R_O	Output Resistance	Output On		0,2	Ω
I_O	Output Current	Output On	0	3	A
$I_{o\text{-}lim}$	Internal current limitation	Output On (Note 2, 3)	typ. 12		A
f_{PWM}	PWM Frequency	(Note 1)	10	3000	Hz
$Duty_{PWM}$	Duty Cycle	(Note 4, 9)	0 to 100,0		%
Res_{PWM}	PWM Resolution	(Note 1, 8)	0,1		%
Digital status input					
R_I	Input Resistance	Output Off; Referenced to GND	typ. 10		kΩ
V_{IH}	Input High Voltage	Output Off (Note 7)	3,5	U_{in}	V
V_{IL}	Input Low Voltage	Output Off	-0,5	1,5	V
f_I	Input frequency (digital input)	50% duty cycle (Note 4, 5)		1/ 2tC	Hz
t_I	Digital Status Input Pulse Width	(Note 5, 6)	> tC		ms
C_O	Input pin capacitance		typ. 1		nF

Note 1: PWM capable outputs are divided into groups. All outputs in the same group share the same PWM frequency (default value 10 Hz). The groups are indicated with upper case characters in the pin table's Group column in section.
Note 2: Current limit for short circuit protection to protect cabling and to limit internal power dissipation.
Note 3: When the limit is exceeded, the output voltage circuit starts to limit the current by switching the output voltage. The switching does not effect the application software.
Note 4: The duty cycle is defined as the percentage of digital 'high' to digital 'low' signals present during a PWM period.
Note 5: tC denotes the software cycle time.
Note 6: The pulse width must be greater that the software cycle time. For example with 50/50 pulse ratio, the pulse frequency is 1 / (2*pulse width)
Note 7: Exceeding the max value might cause permanent damage.
Note 8: The PWM resolution is defined as a maximum number of pulses that you can pack into a PWM period.
Note 9: When the frequency increases, the actual duty cycle may be bigger than the value that has been set.

Epec Oy reserves all rights for improvements without prior notice

4.3.3 Functional Block Diagram

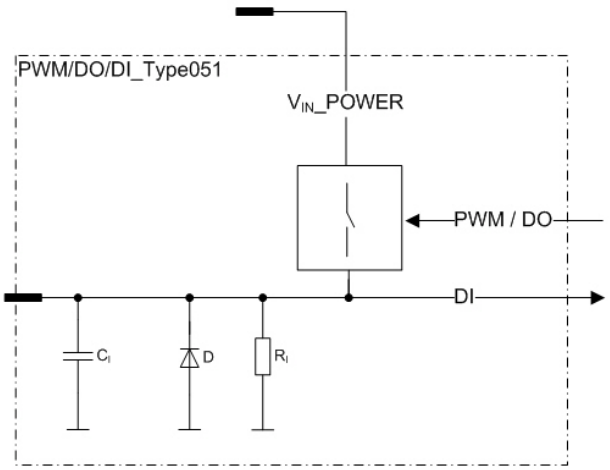

Epec Oy reserves all rights for improvements without prior notice

4.4 PWM/DI/DO_Type073_1

4.4.1 Output (PWM/DO)

- These pins are current sourcing outputs.
  - In other words, pin connects the load to positive supply voltage.
- The application program can also simultaneously monitor the actual state of the pin.
  - This feature makes it possible to detect short circuits to the ground and short circuits to the power supply.
  - Open loads can not be detected because the internal load resistor is connected to the ground.

- These kind of outputs are also capable to generate pulse width modulated (PWM) output signals.
  - This feature is useful when driving proportionally controlled loads, e.g. proportional hydraulic valves.

- PWM frequencies can be configured under software control in groups of outputs.
  - The setting is done by a PWM channel, setting the frequency of one channel sets also the frequencies of all the other channels in the same group.
  - The groups are indicated with upper case characters in the pin table's Group column in section I/O list).

- These outputs have integrated protection features (overload, overcurrent)
- This kind of pin can be used with a step motor (for more information refer to the Programming and Libraries manual)



If you want to use current measuring, you need to connect the other end of the load to the feedback pin.



It is recommended to use the function blocks in *DigitalOutputDiagnostics* library to protect and diagnose outputs when used as digital outputs. For more information, refer to *Epec Programming and Libraries Manual*.

4.4.2 Input (DI)

- This pin can be used as a digital input (DI)
- A pin of this type can also be used as an input by using the output state monitoring feature.
  - In this case, the output functionality of the pin must be kept in the off state.



Closed circuit loops are mandatory when you are using DO or PWM pin as an input.
Closed circuit loop means that the current from the control unit to the sensor must return to the same control unit, see the figures in section *I/O Cabling*.

Epec Oy reserves all rights for improvements without prior notice

Symbol	Parameter	Conditions	Min	Max	Units
R_O	Output Resistance	Output On		0,1	Ω
I_O	Output Current	Output On	0	4	A
$I_{o\text{-}lim}$	Internal current limitation	Output On (Note 2, 3)	typ. 12		A
f_{PWM}	PWM Frequency	(Note 1)	10	3000	Hz
$Duty_{PWM}$	Duty Cycle	(Note 4, 9)	0 to 100,0		%
Res_{PWM}	PWM Resolution	(Note 1, 8)	0,1		%
Digital status input					
R_I	Input Resistance	Output Off; Referenced to GND	typ. 10		kΩ
V_{IH}	Input High Voltage	Output Off (Note 7)	3,5	U_{in}	V
V_{IL}	Input Low Voltage	Output Off	-0,5	1,5	V
f_I	Input frequency (digital input)	50% duty cycle (Note 4, 5)		1/ 2tC	Hz
t_I	Digital Status Input Pulse Width	(Note 5, 6)	> tC		ms
C_I	Input pin capacitance		typ. 1		nF

Note 1: PWM capable outputs are divided into groups. All outputs in the same group share the same PWM frequency (default value 10 Hz). The groups are indicated with upper case characters in the pin table's Group column in section .
Note 2: Current limit for short circuit protection to protect cabling and to limit internal power dissipation.
Note 3: When the limit is exceeded, the output voltage circuit starts to limit the current by switching the output voltage. The switching does not effect the application software
Note 4: The duty cycle is defined as the percentage of digital 'high' to digital 'low' signals present during a PWM period.
Note 5: tC denotes the software cycle time.
Note 6: The pulse width must be greater that the software cycle time. For example with 50/50 pulse ratio, the pulse frequency is 1 / (2*pulse width)
Note 7: Exceeding the max value might cause permanent damage.
Note 8: The PWM resolution is defined as a maximum number of pulses that you can pack into a PWM period.
Note 9: When the frequency increases, the actual duty cycle may be bigger than the value that has been set.

Epec Oy reserves all rights for improvements without prior notice

4.4.3 Functional block diagram

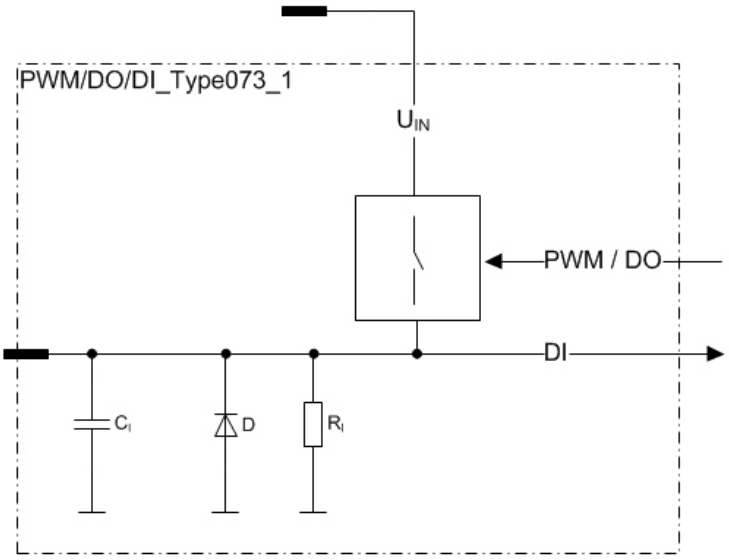

Epec Oy reserves all rights for improvements without prior notice

4.5 FB/AI_Type061_2

- This type of pin is 0-2 A current measuring feedback
- These pins are normally used as a return path for the loads of PWM outputs
- These kinds of pins have a small shunt resistor connected to ground
  - The shunt resistor is used to measure the current flowing through the load
- Nothing prevents using these pins to measure currents from other sources as well

Electrical characteristics

Symbol	Parameter	Conditions	Min	Max	Units
R_I	Input Resistance		typ. 0,1		Ω
I_I	Input Current	Analog measuring range	0	2,27	A
		(Note 1)		2,3	A
BW	Input Low Pass Filter Bandwidth	-3 dB cut-off frequency (Note 2)	typ. 27		Hz
I_E	Input Error	I_I = 2 A; Calculated		135	mA

Note 1: Exceeding the max value might cause damage to input.
Note 2: 2nd order low pass filter

4.5.1 Functional Block Diagram

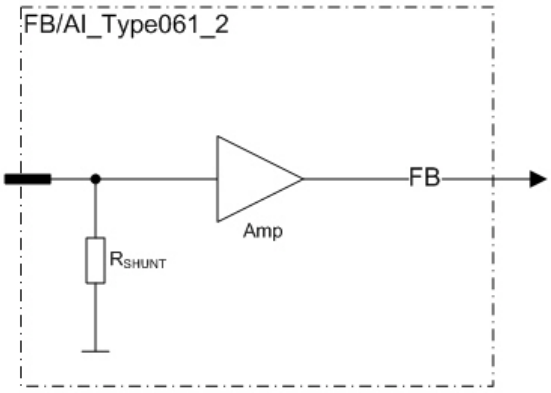

Epec Oy reserves all rights for improvements without prior notice

4.5.2 DO/DI (sinking)_Type074_1



Closed circuit loops are mandatory when using this pin.
Closed circuit loop means that the current from the control unit to the sensor must return to the same control unit, see the figures in section *I/O Cabling*.

4.5.3 Output

- This type of pin is a current sinking output
  - In other words, this type of output connects the loads to the ground (GND) and simultaneously the state of the output can be monitored with an input.



It is recommended to use the function blocks in *DigitalOutputDiagnostics* library to protect and diagnose outputs when used as digital outputs. For more information, refer to *Epec Programming and Libraries Manual*.

4.5.4 Input

- This type of pin can also be used as an input
  - In this case, the output functionality of the pin must be kept in the off state.

Electrical characteristics

Symbol	Parameter	Conditions	Min	Max	Units
R_{ON}	On-resistance	Output On		50	mΩ
I_I	Nominal Input Current	Output On, VDC_{LOAD} < max $V_{I\text{-}range}$ (Note 1)	0	4	A
Digital status input					
R_I	Input Resistance	Output Off	typ. 10		kΩ
V_{IH}	Digital status input High Voltage level	Output Off (Note 2, 3)	2,3	U_{in}	V
V_{IL}	Digital status input Low Voltage level	Output Off (Note 3)	-0,5	1	V
C_I	Input Capacitance		typ. 1		nF

Note 1: Parameter is defined by resistive load.
Note 2: Exceeding the limit values might cause damage to input.
Note 3: No hysteresis. State between voltages 1 V and 2,3 V is unknown.

Epec Oy reserves all rights for improvements without prior notice

4.5.5 Functional block diagram

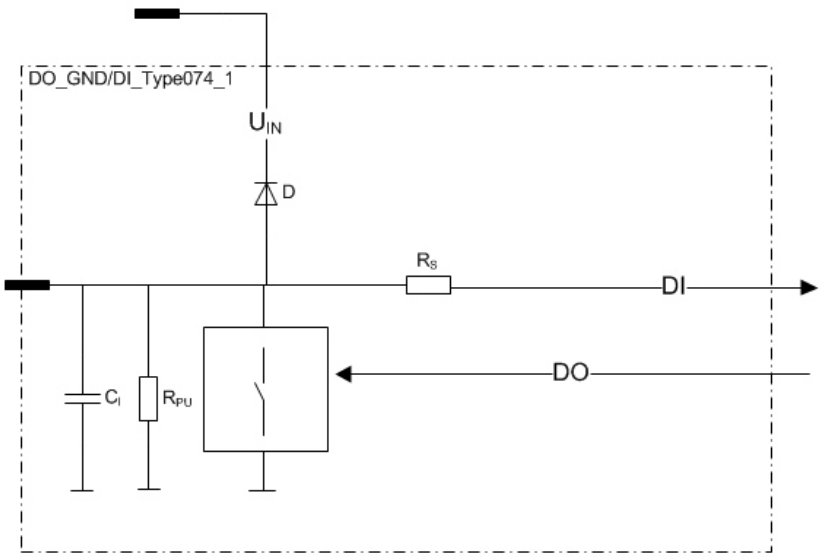

Epec Oy reserves all rights for improvements without prior notice

4.6 Digital Input / Pulse Input

This product has three different types of DI/PI pins. The following table shows their differences:

Pin type	Pull-up selection	Hysteresis
DI/PI_Type059_1	X	-
DI/PI_Type075_1	X	X
DI/PI_Type075_2	X	X

Epec Oy reserves all rights for improvements without prior notice

4.6.1 DI/PI_Type059_1

- This type of pin is a digital input (DI) including a pulse counting (PI) feature.
- This kind of pins have a pull-down resistor to ground
- Pulse inputs can be used as a 1 or 2 channel pulse counter and they have a reset possibility. Possible software channels and pairs are listed in Epec Programming and Libraries Manual, section *Programming 4602 > I/O > Pulse Inputs.*

- The configurable features are controlled by a control signal:
  - pull-up enable selection to internal +5 V

Electrical characteristics

Symbol	Parameter	Conditions	Min	Max	Units
R_I	Input Resistance	Input high; Referenced to GND (Note 3)		12,2	kΩ
		Input Low; Referenced to 5 V		2,2	kΩ
V_{level}	Voltage level	Unconnected pin, no pull-up selected	typ. 1,1		V
		Unconnected pin, pull-up selected	typ.4,7		
V_{IH}	Input High Voltage	Overload conditions (Note 1, 5)	3,5	33	V
V_{IL}	Input Low Voltage	(Note 5)	-0,5	2,5	V
f_I	Input Frequency (frequency measurement and pulse counting)	(Note 6, 7)		20	kHz
	Input Frequency (digital inputs)	(Note 2, 4)		$1/ 2t_C$	kHz
t_I	Input Pulse Width		0,025	10000	ms
C_I	Input Capacitance		typ. 1		nF

Note 1: Exceeding the max value might cause damage to input.
Note 2: t_C denotes the software cycle time in milliseconds.
Note 3: The input resistance is typically 12 kΩ, while input voltage is < 15 V. When input voltage increases over 15 V, the input resistance decreases in a non-linear function.
Note 4: The pulse width must be greater that the software cycle time. For example with 50/50 pulse ratio, the pulse frequency is 1 / (2*pulse width).
Note 5: No hysteresis. State between voltages 2,5 V and 3,5 V is unknown.
Note 6: The maximum value can be reached with 50 % duty cycle.
Note 7: The maximum frequency sum for all the pins is 40 kHz.

Epec Oy reserves all rights for improvements without prior notice

4.6.1.1 Functional block diagram

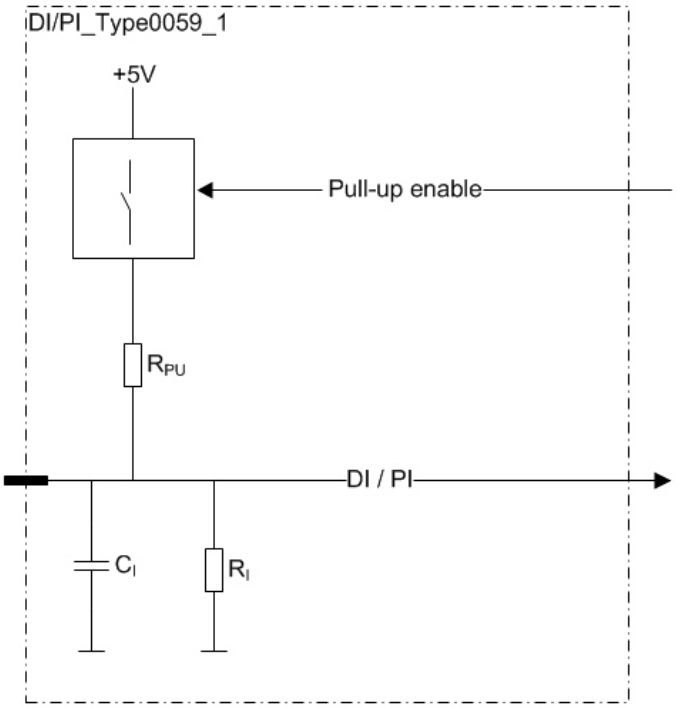

Epec Oy reserves all rights for improvements without prior notice

4.6.2 DI/PI_Type075_1

- This type of pin is a digital input (DI) including a pulse counting (PI) feature.
- This kind of pins have a pull-down resistor to ground
- Pulse inputs can be used as a 1 or 2 channel pulse counter and they have a reset possibility. Possible software channels and pairs are listed in Epec Programming and Libraries Manual, section *Programming 4602 > I/O > Pulse Inputs.*

- The configurable features are controlled by a control signal:
  - pull-up enable selection to internal +5 V

Electrical characteristics

Symbol	Parameter	Conditions	Min	Max	Units
R_I	Input Resistance	Input high; Referenced to GND		12,2	kΩ
		Input Low; Referenced to 5 V		2,2	kΩ
V_{level}	Voltage level	Unconnected pin, no pull-up selected	typ. 0		V
		Unconnected pin, pull-up selected	typ. 4,6		V
V_{IH}	Input High Voltage	Overload conditions (Note 1, 6)	3,3	33	V
V_{IL}	Input Low Voltage	(Note 6)	-0,5	1,7	V
f_I	Input Frequency (frequency measurement and pulse counting)	(Note 4, 5)		20	kHz
	Input Frequency (digital inputs)	(Note 2, 3)		$1/ 2t_C$	kHz
t_I	Input Pulse Width		0,025	10000	ms
C_I	Input Capacitance		typ. 1		nF

Note 1: Exceeding the max value might cause damage to input.
Note 2: t_C denotes the software cycle time in milliseconds.
Note 3: The pulse width must be greater that the software cycle time. For example with 50/50 pulse ratio, the pulse frequency is 1 / (2*pulse width)
Note 4: The maximum value can be reached with 50 % duty cycle.
Note 5: The maximum frequency sum for all the pins is 40 kHz.
Note 6: Includes hysteresis. The input state is maintained until the second voltage limit is exceeded:

Epec Oy reserves all rights for improvements without prior notice

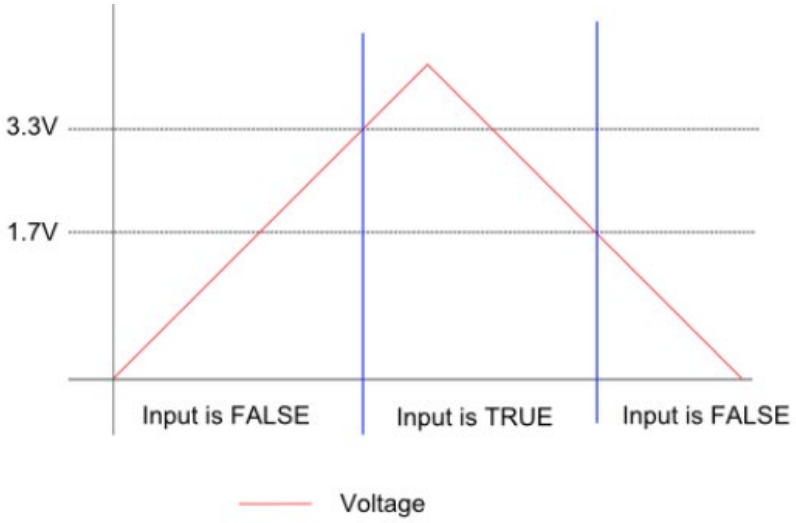

4.6.2.1 Functional block diagram

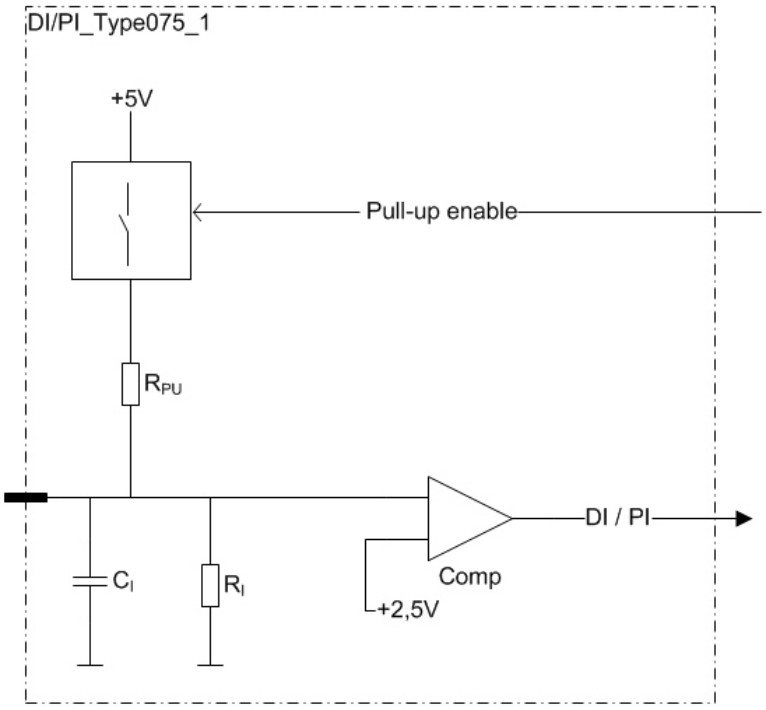

Epec Oy reserves all rights for improvements without prior notice

4.6.3 DI/PI_Type075_2

- This type of pin is a digital input (DI) including a pulse counting (PI) feature.
- This kind of pins have a pull-down resistor to ground
- Pulse inputs can be used as a 1 or 2 channel pulse counter and they have a reset possibility. Possible software channels and pairs are listed in Epec Programming and Libraries Manual, section *Programming 4602 > I/O > Pulse Inputs.*

- The configurable features are controlled by a control signal:
  - pull-up enable selection to internal +5 V

Electrical characteristics

Symbol	Parameter	Conditions	Min	Max	Units
R_I	Input Resistance	Input high; Referenced to GND		12,2	kΩ
		Input Low; Referenced to 5 V		2,2	kΩ
V_{level}	Voltage level	Unconnected pin, no pull-up selected	typ. 0		V
		Unconnected pin, pull-up selected	typ. 4,6		V
V_{IH}	Input High Voltage	Overload conditions (Note 1, 6)	1,4	33	V
V_{IL}	Input Low Voltage	(Note 6)	-0,5	1,1	V
f_I	Input Frequency (frequency measurement and pulse counting)	(Note 4, 5)		20	kHz
	Input Frequency (digital inputs)	(Note 2, 3)		$1/ 2t_C$	kHz
t_I	Input Pulse Width		0,025	10000	ms
C_I	Input Capacitance		typ. 1		nF

Note 1: Exceeding the max value might cause damage to input.
Note 2: t_C denotes the software cycle time in milliseconds.
Note 3: The pulse width must be greater that the software cycle time. For example with 50/50 pulse ratio, the pulse frequency is 1 / (2*pulse width)
Note 4: The maximum value can be reached with 50 % duty cycle.
Note 5: The maximum frequency sum for all the pins is 40 kHz.
Note 6: Includes hysteresis. The input state is maintained until the second voltage limit is exceeded:

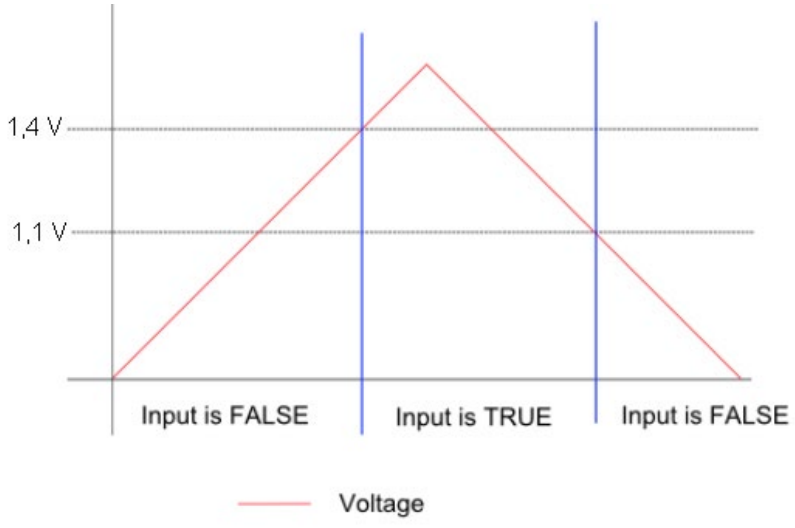

Epec Oy reserves all rights for improvements without prior notice

4.6.3.1 Functional block diagram

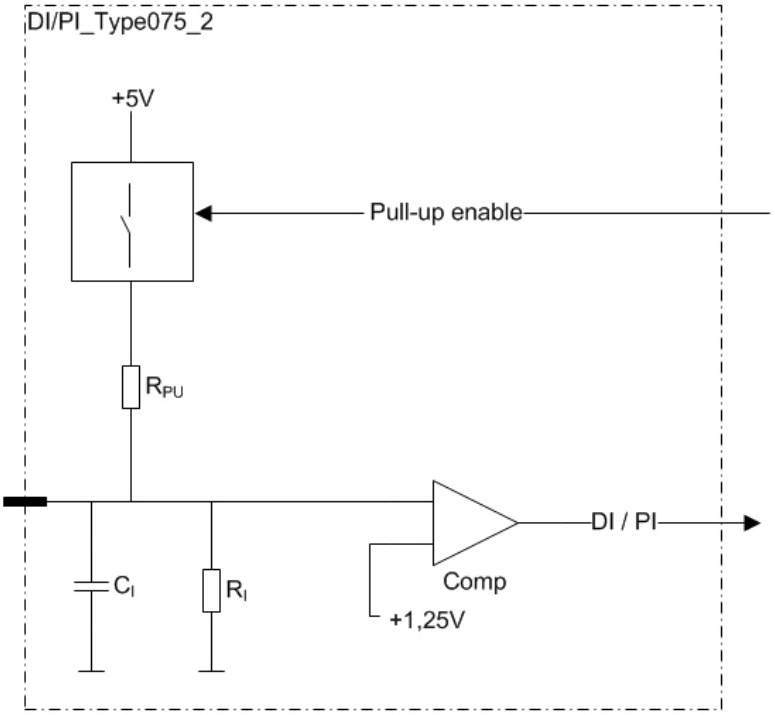

Epec Oy reserves all rights for improvements without prior notice

4.7 Analog Input / Digital Input

This product has four different types of AI/DI pins. The following table shows their differences:

Pin type	Measuring range	Pull-up selection	Current / voltage selection
AI/DI_Type061_3	0-37		
AI/DI_Type064_3	0-5		X
AI/DI_Type071_1	0-5	1,2 kΩ 4,87 kΩ 47 kΩ	

Epec Oy reserves all rights for improvements without prior notice

4.7.1 AI/DI_Type061_3

- These pins are analog inputs
- These pins can be used as high impedance voltage inputs for signals from 0 to 37 volts

4.7.1.1 DI

- These pins can also be used as digital inputs by using an application library.

Electrical characteristics

Symbol	Parameter	Conditions	Min	Max	Units
V_I	Input Voltage measuring range		0	37	V
R_I	Input Resistance	(Referenced to GND)	typ. 74,8		kΩ
I_E	Input Error	V_I = 37 V; Calculated		1,85	V
BW	Input Low Pass Filter Bandwidth	-3 dB cut-off frequency	typ. 38		Hz
C_I	Input pin capacitance		typ. 1		nF
$V_{I\text{-range}}$	Input voltage range	(Note 1)	-0,5	50	V

Note 1: Exceeding the max value might cause damage to input.

4.7.1.2 Functional block diagram

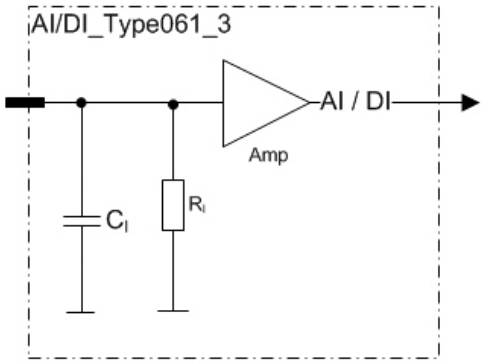

Epec Oy reserves all rights for improvements without prior notice

4.7.2 AI/DI_Type064_3

- These pins are analog inputs
- The pins can be configured either as a current input or as a voltage input.
- There is a control signal for selecting:
  - Voltage mode: High impedance input for signal from 0 to 5 V
  - Current mode: Low impedance input for signal from 0 to 22 mA
- The input impedance is controlled by a bit in output memory (%Q).



When configured to current mode, analog inputs can be protected against overvoltage by using *4000AnalogInputProtection* programming library. For more information, refer to *Epec Programming and Libraries Manual*.

4.7.2.1 DI

- These pins can also be used as digital inputs by using an application library.
- The pin must be configured to voltage mode when using as digital input

Electrical characteristics

Symbol	Parameter	Conditions	Min	Max	Units
V_I	Input Voltage measuring range		0	5	V
R_I	Input Resistance	Voltage mode (referenced to GND)	typ. 82,0		kΩ
		Current mode	typ. 220		Ω
I_I	Input Current measuring range		0	22,7	mA
I_E	Input Error	Voltage mode		0,18	V
		Current mode		0,8	mA
BW	Input Low Pass Filter Bandwidth	-3 dB cut-off frequency	typ. 40		Hz
C_I	Input pin capacitance		typ. 47		nF
$V_{I\text{-range}}$	Input voltage range	Voltage mode (Note 1)	-0,5	50	V
		Current mode (Note 1)	-0,5	30	V

Note 1: Exceeding the max value might cause damage to input.

Epec Oy reserves all rights for improvements without prior notice

4.7.2.2 Functional Block Diagram

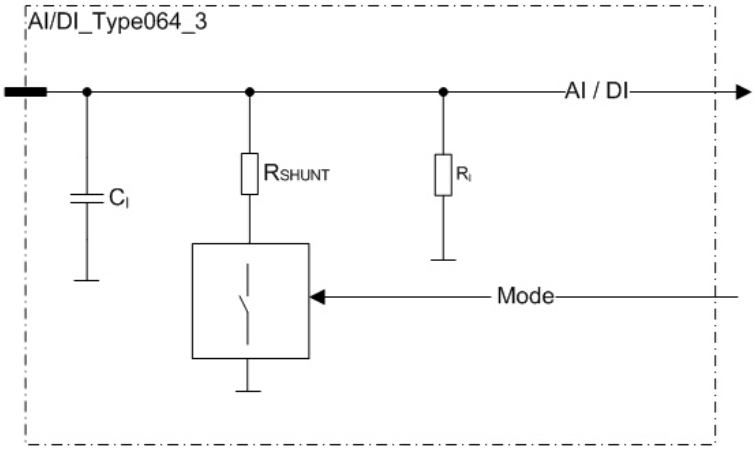

Epec Oy reserves all rights for improvements without prior notice

4.7.3 AI/DI_Type071_1

- This type of pin is an analog input and a digital input
- The configurable features are controlled by three control signals:
- The pin can be connected to +5 V by one of three different sizes of pull-up resistors. The three selectable resistor sizes are described in the *Electrical characteristics* table.



For changing the pull-up resistor, see *4602Specific* programming library in *Epec Programming and Libraries Manual*.

4.7.3.1 DI

- These pins can also be used as digital inputs by using an application library.

Electrical characteristics

Symbol	Parameter	Conditions	Min	Max	Units
V_I	Input Voltage measuring range	Voltage mode	0,0	5,0	V
V_{PU}	Pull-up voltage	(Note 1)	typ. 5		V
V_{I-PU}	Pull-up Voltage measuring range		0,0	5,0	V
R_{PU}	Pull-up Resistance	Pull-up resistor 1 (Note 2)	typ. 1,2		kΩ
		Pull-up resistor 2 (Note 2)	typ. 4,87		kΩ
		Pull-up resistor 3 (Note 2)	typ. 47		kΩ
BW	Input Low Pass Filter Bandwidth	-3 dB cut-off frequency	typ. 40		Hz
BW-pull-up	Input Low Pass Filter Bandwidth	-3 dB cut-off frequency, Pull-up voltage measuring	typ. 47		Hz
I_E	Input Error	Calculated (Note 4)		± 2	%
C_I	Input pin capacitance		typ. 1		nF
V_{I-max}	Max Input voltage	Overload conditions (Note 3)	-0,5	50	V

Note 1: Temperature and load-dependent, measure using library *SensorCalibrationAndDiagnostic*. Use pull-up voltage measurement value as the sensor calibration's reference voltage (for more information see *Epec Programming and Libraries Manual*).
Note 2: Referenced to + 5 V.
Note 3: Exceeding the max value might cause damage to input.
Note 4: When using function *ADC_To_Ohm* in library *ADConversion*.

Epec Oy reserves all rights for improvements without prior notice

4.7.3.2 Functional block diagram

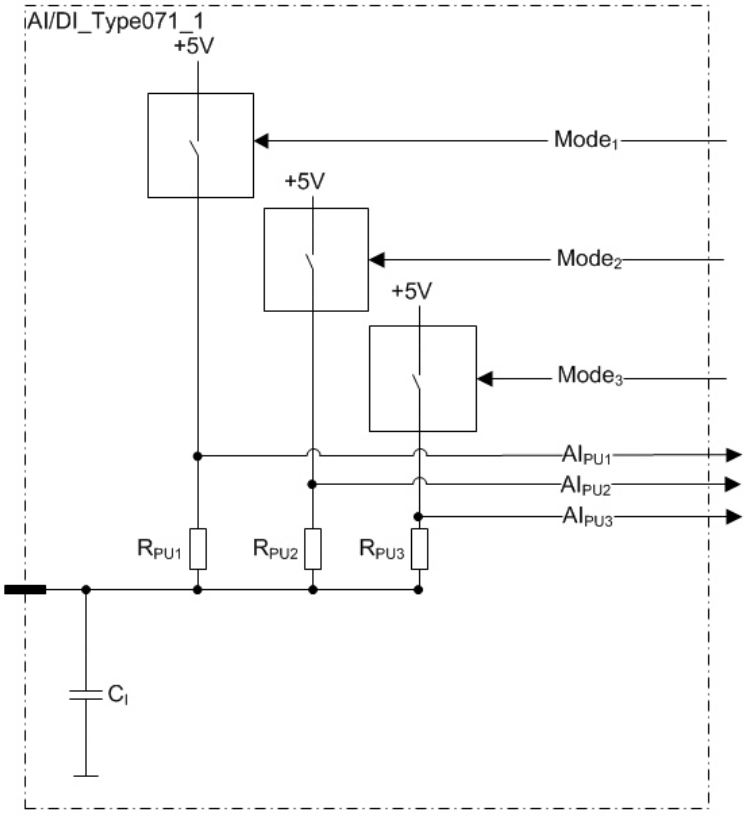

Epec Oy reserves all rights for improvements without prior notice

4.8 +5V REF_Type041_4

- This is an internally regulated and monitored reference voltage supply for external devices.
- This reference output can be switched on/off by application.

4.8.1 Protection Features

- Overcurrent
- External voltage protection
- Errors are indicated with a fault signal

4.8.2 Voltage Monitoring

The level of the output voltage can be monitored by application.

Electrical characteristics

Symbol	Parameter	Conditions	Min	Max	Units
$V_{o\text{-}level}$	Output voltage	Output On; Unconnected pins	typ. 5		V
R_o	Output Resistance	Output On		0,46	Ω
I_o	Nominal Output Current	Output On; Max total for all pins together	0	270	mA
$I_{o\text{-}lim}$	Internal Current Limitation	Output On (Note 2, 3)	typ. 370		mA
$I_{o\text{-}sc}$	Short-circuit Current Limit	Output On; Overcurrent	typ. 270		mA
C_o	Output Capacitance		typ. 4,7		uF
$V_{I\text{-}max}$	Max Input voltage	Overload conditions (Note 1)		33	V
Voltage monitoring					
$V_{I\text{-}range}$	Nominal Voltage measuring range		0	5	V
	Fault-signal overvoltage threshold	Overvoltage	Typ. 5,2		V
	Fault-signal activation time	Overvoltage / Overload		10	ms

Note 1: When output voltage is under overload conditions, for example, short circuit to supply voltages. Exceeding the max value might cause damage to output.
Note 2: Current limit for overcurrent protection to limit internal power dissipation.
Note 3: When the limit is exceeded, the output current is regulated. In regulation, the output is switched into overcurrent mode.

Epec Oy reserves all rights for improvements without prior notice

4.8.3 Functional Block Diagram

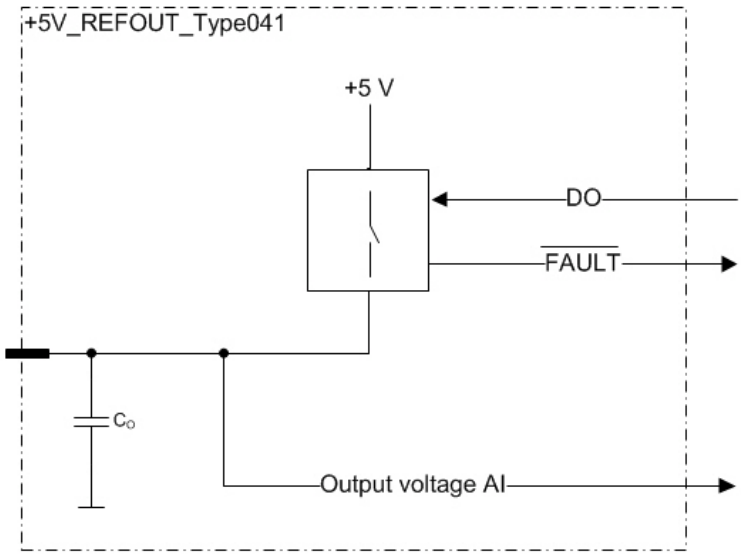

4.8.4 Diagnostics

The +5V reference supply has two diagnostics checks:

- analog output voltage monitoring and
- dedicated digital fault-signal

Both can be used to indicate overload and overvoltage situations. The diagnostics are independent from each other.

For fastest and most reliable error detection, it is recommended to use both output voltage monitoring and fault-flag diagnostics to detect errors.

4.8.4.1 OVERLOAD

The diagnostics can detect overcurrent situation. The fault-signal is activated when excessive current is taken from the output. The output current is regulated when internal current limit is reached. The regulation current is always smaller than the limit. Current regulation causes the output voltage to drop with increasing load. This can be detected, using the output voltage monitoring feature, by setting a minimum (low) value limit for the output voltage.

With large enough loads, the output is switched temporarily off to protect the output from overheating. This is indicated by the fault-signal.
The fault-signal is deactivated, when the error source is removed by decreasing the load or when the output is turned off.

Overheat protection of the +5V REF can cause spurious errors in other analog measurements. Thus it is recommended to turn off the output when fault-signal becomes active.

Epec Oy reserves all rights for improvements without prior notice

4.8.4.2 OVERVOLTAGE

Overvoltage event caused by an external source can be detected by using a combination of the diagnostic features. The fault-signal is activated when pin voltage goes above the fault-signal overvoltage threshold level. If the output voltage monitoring value is 5 V (or more) and the fault-signal is active, it can be determined that an external voltage source is connected to the output pin.

The output pins are protected against external voltages, but it is not recommended to connect external voltage sources to these pins.



In case of a limit violation, the output should be disabled as soon as possible. The control unit can handle short term errors, but long term (e.g. several hours) exposures should be avoided with application/system design. Long term exposure to overvoltage or overload can cause permanent damage to the unit.

Epec Oy reserves all rights for improvements without prior notice

4.9 Power Supply

4.9.1 Overvoltage Protection

- Max. 70 VDC (Stresses above this value may cause permanent damage to the unit.)
- Control unit has an overvoltage protection (OVP) which protects the unit and loads against overvoltage.
  - The overvoltage protection cuts off the power feed for the PWM/DI/DO_Type073_1 and PWM/DI/DO_Type051_5 and +5V REF in case of overvoltage. The overvoltage protection is activated when voltage reaches circa 34 V.
  - Power feed is restored when supply voltage drops under 34 V and the overvoltage notification is reset. The outputs (PWM/DI/DO_Type073_1 and PWM/DI/DO_Type051_5) and +5 V REF are returned to their previous states.
  - OVP reset is application dependent, the configuration can be done using Epec MultiTool. If you don't use MultiTool, see more information in Epec Programming and Libraries Manual.

4.9.2 Power Consumption

- Approx. 1,5 W (+24 VDC, no external load)
- Supply Voltage (U_{in}) maximum continuous current 30 A (with full external load)
- GND current sum max 30 A
- Maximum current per one GND and power pin is 10 A

Use the power ground pins for the power supply return lines. The following table shows the power supply pin locations:

Power supply pins

Designation	Connector / pin number	Potential
Supply voltage (for logic and power)	X1.24 X1.25 X1.26	+12/+24 VDC (+8,5…33 VDC)
Power ground pins	X1.1 X1.2 X1.3	GND (10 A/pin)
I/O ground	X1.8 X1.27 X2.3 X2.4 X2.10 X2.11 X2.12 X2.15 X2.16 X3.2 X3.3 X3.4 X3.8-3.12 X3.14 X3.15 X3.23	GND (10 A/pin)

Supply outputs		
Reference supply (for external devices)	X2.5 X3.20	+5 VDC / max 270 mA (max total for all pins together)

Epec Oy reserves all rights for improvements without prior notice



To ensure correct measurement, reserve separate GND pin(s) for AI pins and don't use it/them for any other purposes. For more information, see section *I/O Cabling*.



Always use an external fuse to protect the control unit. The fuse is needed for reverse voltage and overload protection.
For more information, see section *Power Supply Cabling*.

Electrical characteristics

Symbol	Parameter	Conditions	Min	Max	Units
V_I	Nominal Input voltage		8,5	33	V
$I_{TOT-max}$	Max Total Current Output			30	A
$V_{I-Load-dump}$	Max Input transient Voltage level	(Note 1)		123	V
V_{I-max}	Max Continuous Input Voltage Level	(Note 2)	-0,5	70	V
$V_{OVP-Reg}$	Regulated Overvoltage threshold level		typ. 34		V
V_{UVP}	Undervoltage Threshold Level		typ. 7,5		V
Supply voltage monitoring					
$V_{I-range}$	Nominal Input Voltage measuring range		0	46	V

Note 1: Load dump protection according to ISO 7637-2: 2004 pulse 5, Us=+123 V
Note 2: Limited functionality when the voltage is higher than the nominal. If the voltage is less than 7,5 V, the control unit is in non-operational state.

Epec Oy reserves all rights for improvements without prior notice

5 INTERNAL DIAGNOSTICS

5.1 Error Log

The control unit's internal error log stores the firmware errors in a log.
The error log can be read using a library functions *LOG_ERROR* and *LOG_GET_EVENT* in device specific *Ext* libraries (for example *4000Ext*).

For more information about the logs and how to read them, refer to *Epec Programming and Libraries Manual MAN000538*.

Epec Oy reserves all rights for improvements without prior notice

6 APPROVALS AND SAFETY

6.1 EMC Tests

Epec 4602 control units are certified according to EMC tests that are described in this section.

The following tables provide a summary of performed EMC tests:

Emission tests according to the test specification EN 61000-6-3 (2007)

Emission test	Test method
Radiated disturbance	CISPR 16-2-3
Conducted disturbance at mains ports	CISPR 16-2-1

Immunity tests according to the test specification EN 61000-6-2 (2005)

Immunity test	Test method
Electrostatic discharge (ESD)	EN 61000-4-2
Radiated radio-frequency electromagnetic field	EN 61000-4-3
Electrical fast transients (EFT/B)	EN 61000-4-4
Surges	EN 61000-4-5
Conducted radio-frequency common mode	EN 61000-4-6

Emission tests according to the E/ECE Regulation No. 10, Revision 4 (2012)

Emission test	Test method	Conclusion
Measurement of radiated interference field strength in the frequency range 30 – 1000 MHz	E/ECE Reg. No. 10, Annexes 7 and 8	Pass [1)]
Measurement of conducted disturbances	E/ECE Reg. No. 10, Annex 10	Pass [2)]

[1)] Limit values according to the E/ECE Regulation No. 10, Sections 6.5.2 and 6.6.2.
[2)] Limit values according to the E/ECE Regulation No. 10, section 6.9.1.

Immunity tests according to the E/ECE Regulation No. 10, Revision 4 (2012)

Immunity test	Test method	Conclusion
Radiated radio-frequency electromagnetic field	E/ECE Reg. No. 10, Annex 9	Pass [1)]
Immunity to transient disturbances conducted along supply lines	E/ECE Reg. No. 10, Annex 10	Pass [2)]

[1)] The requirements defined in the E/ECE Regulation No. 10, section 6.10
[2)] The requirements defined in the E/ECE Regulation No. 10, section 6.8.1.

Epec Oy reserves all rights for improvements without prior notice

The following tables provide more detailed descriptions about the performed EMC tests:

<table>
<tr><th colspan="2">Emission tests according to the E/ECE Regulation No. 10, Revision 4 (2012)</th></tr>
<tr><td>Radiated disturbance emission test</td><td>Test method E/ECE Reg. No. 10, Annexes 7 and 8, CISPR 25
<table>
<tr><th>Frequency (MHz)</th><th>Limit value (dBmV/m)</th></tr>
<tr><td>30 – 1000</td><td>62/52/63
(Broadband QP)</td></tr>
<tr><td>30 – 1000</td><td>52/42/53
(Narrowband AVE)</td></tr>
</table></td></tr>
<tr><td>Conducted disturbances emission test</td><td>Test method E/ECE Reg. No. 10, Annex 10, ISO 7637-2: 2004
<table>
<tr><th>Port</th><th>Limit level (V)</th></tr>
<tr><td rowspan="2">12 V DC input</td><td>+75</td></tr>
<tr><td>-100</td></tr>
<tr><td rowspan="2">24 V DC input</td><td>+150</td></tr>
<tr><td>- 450</td></tr>
</table></td></tr>
</table>

Epec Oy reserves all rights for improvements without prior notice

Immunity tests according to the E/ECE Regulation No. 10, Revision 4 (2012)

Immunity to transient disturbances conducted along supply lines test

Test method E/ECE Reg. No. 10, Annex 10, ISO 7637-2: 2004
Performance criterion:

Pulse	Criterion
1	C
2a	B
2b	C
3a	A
3b	A
4	C
5	C

24 V input, Pulse:

Pulse	Pulse parameters
1	3/1000 µs, -600 V, 5000 pulses
2a	1/50 µs, +112 V, 5000 pulses
2b	20V, 220 ms, 10 pulses
3a	5/100 ns, -300 V, 60 minutes
3b	5/100 ns, +300 V, 60 minutes
4	t_7 100 ms -16 V, 10 s -12 V, 10 pulses
5	t_d 350 ms, R_i 1 Ω, +123 V 5 pulses

12 V input, Pulse:

Pulse	Pulse parameters
1	1/2000 µs, -150 V, 5000 pulses
2a	1/50 µs, +112 V, 5000 pulses
2b	10 V, 220 ms, 10 pulses
3a	5/100 ns, -220 V, 60 minutes
3b	5/100 ns, +150 V, 60 minutes
4	t_7 40 ms -7,0 V, 5 s -6 V, 10 pulses
5	t_d 400 ms, R_i 0,5 Ω, +123 V 5 pulses

Immunity of ESAs to electromagnetic radiation

Test method E/ECE Reg. No. 10, Annex 9, ISO 11452-2
Performance criterion: No degradation of 'Immunity-related functions'
Sweep step: 1%, time/step: 2 s

Specification	Frequency Range (MHz)	Test level
Modulation AM80% 1 kHz	20-800	30 V/m (constant peak)
Modulation PM 577/4600 µs	800-2000	30 V/m (constant peak)

Epec Oy reserves all rights for improvements without prior notice

Classification of functional status

Class A:
All functions of a device/system perform as designed during and after exposure to disturbance.

Class B:
All functions of a device/system perform as designed during and after exposure to disturbance. However, one or more of them can go beyond specified tolerance. All functions return automatically to within normal limits after exposure is removed. Memory functions shall remain class A.

Class C:
One or more functions of a device/system do not perform as designed during exposure but return automatically to normal operation after exposure is removed.

Class D:
One or more functions of a device/system do not perform as designed during exposure and do not return to normal operation until exposure is removed and a device/system is reset by simple "operator/use" action.

Class E:
One or more functions of a device/system do not perform as designed during exposure and cannot be returned to operation without repairing the device/system.

<table>
<tr><td colspan="3">EN 61000-6-3 (2007)
Electromagnetic compatibility-generic emission standard
part6-3: residential, commercial and light industry</td></tr>
<tr><td>Radiated disturbance emission test</td><td colspan="2">Test method EN 55022, CISPR 16-2-3
<table><tr><th>Frequency (MHz)</th><th>Limit value (dBmV/m)</th></tr><tr><td>30 – 1000</td><td>30/37 (QP)</td></tr></table></td></tr>
<tr><td>Conducted disturbance at main ports emission test</td><td colspan="2">Test method EN 55022, CISPR 16-2-1
<table><tr><th>Frequency (MHz)</th><th>Limit value (dBmV)</th></tr><tr><td>0,15 - 30</td><td>66/56/60 (QP)</td></tr><tr><td>0,15 – 30</td><td>56/46/50 (AVE)</td></tr></table></td></tr>
<tr><td colspan="3">EN 61000-6-2 (2005)
Electromagnetic compatibility-generic immunity standard
part6-2: industrial environment</td></tr>
<tr><td>Conducted radio-frequency common mode immunity test</td><td colspan="2">Test method EN 61000-4-6
Performance criterion A
<table><tr><th>Specification</th><th>Port</th><th>Test level</th></tr><tr><td rowspan="2">Frequency range 0,150-80 MHz Modulation AM80% 1 kHz Sweep step 1%, time/step 2s</td><td>DC input port</td><td>10 Vemf</td></tr><tr><td>Signal ports</td><td>10 Vemf</td></tr></table></td></tr>
<tr><td>Radiated radio-frequency</td><td colspan="2">Test method EN 61000-4-3
Performance criterion A</td></tr>
</table>

Epec Oy reserves all rights for improvements without prior notice

<table>
<tr><td>electromagnetic field immunity test</td><td>
<table>
<tr><th>Specification</th><th>Range (MHz)</th><th>Test level</th></tr>
<tr><td rowspan="2">Frequency range 80-2700 MHz Modulation AM 80% 1 kHz Sweep step 1%, time/step 2 s</td><td>80-2500</td><td>10 V/m</td></tr>
<tr><td>2500-2700</td><td>3 V/m</td></tr>
</table>
</td></tr>
<tr><td>Electrical fast transients (EFT/B) immunity test</td><td>Test method EN 61000-4-4
Performance criterion B
<table>
<tr><th>Test pulse</th><th>Port</th><th>Test level</th></tr>
<tr><td rowspan="2">5 (Tr) / 50 (Th) ns, repetition frequency 5 kHz, duration 1 minute</td><td>DC input port</td><td>± 2,0 kVp</td></tr>
<tr><td>Signal port</td><td>± 1,0 kVp</td></tr>
</table>
</td></tr>
<tr><td>Surges immunity test</td><td>Test method EN 61000-4-5
Performance criterion B
<table>
<tr><th>Test pulse</th><th>Port</th><th>Coupling mode</th><th>Test level</th></tr>
<tr><td rowspan="2">1,2 (Tr) / 50 (Th) (8/20) us, repetition rate 1 / minute</td><td rowspan="2">DC power input</td><td>Differential</td><td>± 0,5 kVp</td></tr>
<tr><td>Common mode</td><td>± 0,5, ± 1,0 kVp</td></tr>
</table>
</td></tr>
<tr><td>Electrostatic discharge (ESD) immunity test</td><td>Test method EN61000-4-2
Performance criterion B
<table>
<tr><th>Discharge mode</th><th>Test level (kVp)</th></tr>
<tr><td>Contact</td><td>± 2, ± 4, ± 6, ± 8</td></tr>
<tr><td>Indirect contact</td><td>± 2, ± 4, ± 6, ± 8</td></tr>
<tr><td>Air</td><td>± 2, ± 4, ± 8, ± 15</td></tr>
</table>
</td></tr>
</table>

Performance criteria for immunity tests

Performance criterion A:
The EUT shall continue to operate as intended during and after the test. No degradation of performance is allowed.

Performance criterion B:
The EUT shall continue to operate as intended after the test. However, moderate degradation of performance is allowed. No change of actual operating state or loss of memory functions is allowed.

Epec Oy reserves all rights for improvements without prior notice

6.2 Environmental Tests

The following environmental tests have been performed on Epec 4602 control units:

Temperature			
Test	**Temperature**	**Duration/ Exposure time**	**Remarks**
Cold IEC 60068-2-1 (2007-03), Test Ad	-45 ˚C	16 h	1 ˚C/min
Dry heat IEC 60068-2-2 (2007-07), Test Bb	70 ˚C	16 h	1 ˚C/min
Damp heat cyclic IEC 60068-2-30 (2005-08), Test Db	+25 ˚C/+55 ˚C		rel. humidity > 90% cycle duration 24h six test cycles
Change of temperature IEC 60068-2-14 (2009-01), Test Na	-50 ˚C/+60 ˚C	3 h	change time between extreme temperatures 1-2 min 5 test cycles
Change of temperature IEC 60068-2-14 (2009-01), Test Nb	-40 ˚C/+70 ˚C	3 h	change of temperature 10 ˚C/min 2 test cycles
Mechanical resistance			
Test	**Duration and direction**	**Remark**	
Shock test IEC 60068-2-27 (2008-02) Test Ea	pulse duration 6 ms 500 impulses in every six directions	half sine pulse shape peak acceleration 500 m/s^2	
Shock test IEC 60068-2-27 (2008-02) Test Ea	pulse duration 4 ms 100 impulses in two directions	half sine pulse shape peak acceleration 750 m/s^2 and 1000 m/s^2	
Vibration, random IEC 60068-2-64 (2008-04), Test Fh	test duration 60 min in every three test axes	frequency range 10...500 Hz ASD-level 5 m^2/s^3, 10 ... 200 Hz ASD-level 1,0 m^2/s^3, 200 ... 500 Hz total spectral acceleration 3,54 grms	
Vibration, random IEC 60068-2-64 (2008-04), Test Fh	test duration 10 min in one test axis at each level	frequency range 10...500 Hz ASD-level 0,1 g^2/Hz (10,0 m^2/s^3), 10...200 Hz ASD-level 0,02 g^2/Hz (2,0 m^2/s^3), 200...500 Hz, 5,00 grms (50 m/s^2) ASD-level 0,2 g^2/Hz (20,0 m^2/s^3), 10...200 Hz ASD-level 0,04 g^2/Hz (4,0 m^2/s^3), 200...500 Hz, 7,05 grms (70,5 m/s^2) ASD-level 0,4 g^2/Hz (40,0 m^2/s^3), 10...200 Hz ASD-level 0,08 g^2/Hz (8,0 m^2/s^3), 200...500 Hz, 9,96 grms (99,6 m/s^2)	

Epec Oy reserves all rights for improvements without prior notice

		ASD-level 0,8 g²/Hz (80,0 m²/s³), 10...200 Hz ASD-level 0,16 g²/Hz (16,0 m²/s³), 200...500 Hz, 14,08 grms (140,8 m/s²) ASD-level 1,45 g²/Hz (145,0 m²/s³), 10...200 Hz ASD-level 0,29 g²/Hz (29,0 m²/s³), 200...500 Hz, 19,04 grms (190,4 m/s²)	
Free fall, IEC 60068-2-31 (2008-05), Test Ec	one fall / direction on each surface and corner	fall height 100 cm	
Corrosion			
Test	**Temperature**	**Duration**	**Concentration**
Salt spray test ISO 9227	+35 ˚C	24 h	5 % NaCl
Tightness tests for IP67			
Test	Duration and prosedure	Remark	
Dust test for IP6X according to IEC 60529	exposed to the free settling dust for 8 hours under pressure during the test 2 kPa flow rate of the air 0,1 l/min	no deposit of dust noticed inside complies with the requirements stated for the protection class IP6X	
Water test for IPX7 according to IEC 60529	immersion duration 30 minutes immersion depth 1000 mm water temperature +22 ˚C	no ingress of water noticed inside complies with the requirements stated for the protection class IPX7	

Epec Oy reserves all rights for improvements without prior notice

7 MECHANICS AND CABLING

7.1 Plugging and unplugging the connectors

Epec control units use heavy duty gold plated, locked and sealed AMPSEAL connectors. The following figure shows an example of an AMPSEAL connector:

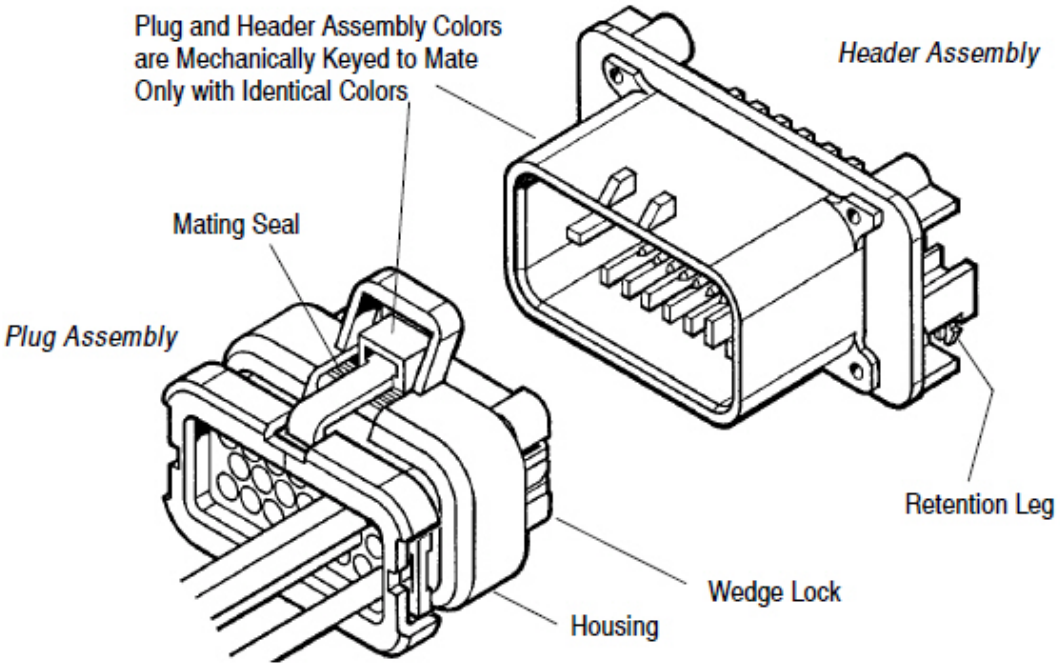

- Gold plated AMPSEAL connectors pack a current of 15 amperes per contact and tolerate operating temperature range.
- All module connectors are mechanically keyed to mate only with identical colors (blue, grey and black).



When connecting, make sure that:

- connectors are pressed down to the bottom and that they are locked
- connectors are clean (avoid moisture or dirt inside the connector)
- unused connectors are covered with empty connectors of the same color (this helps to keep the control unit connectors dry and protected)
- all cables, connectors and tools are of correct type, and sufficiently high quality, and suitable for this kind of use (protection for moisture, mechanical stability, power durability, coupling resistance among other things)
- there is a sufficient margin (slack) left in the cables to prevent the torsion of the connectors
- wires are bound to the control unit cover base knob with cable ties

Epec Oy reserves all rights for improvements without prior notice

The following figure describes some general instructions about the connectors.

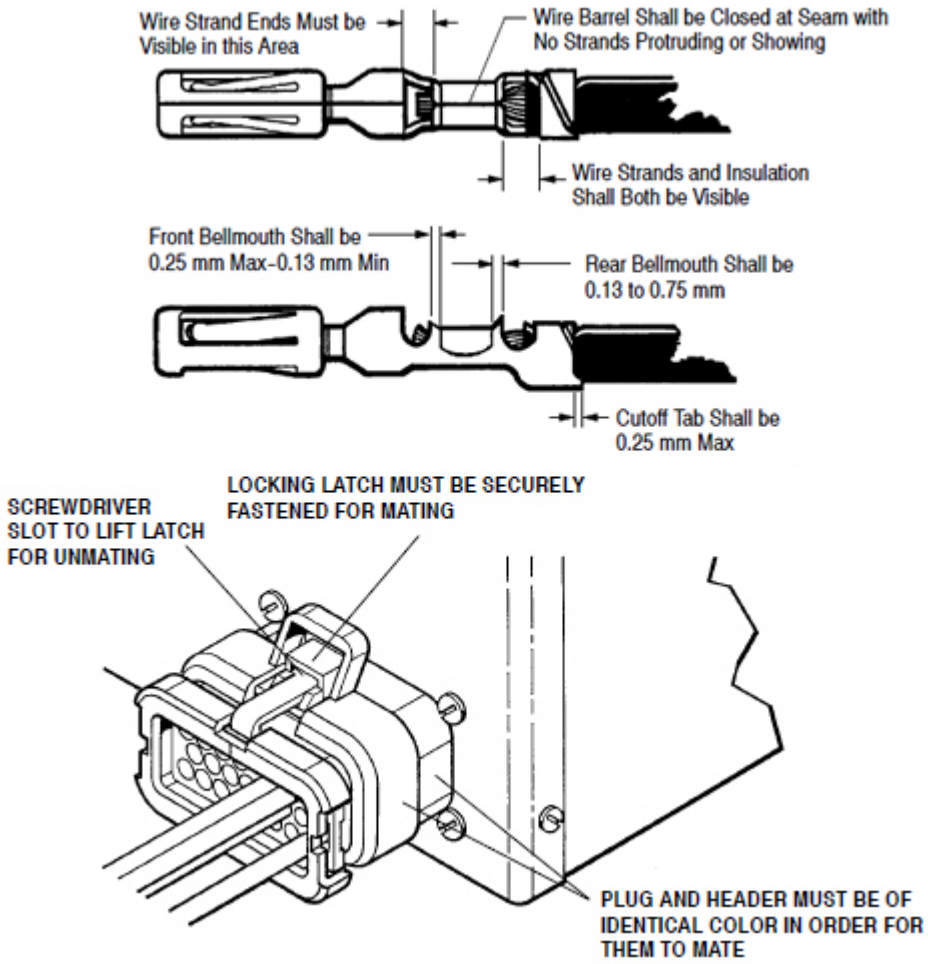

Refer to AMP Application Specification 114-16016 for more detailed information on connectors and cable recommendations.

Ordering codes for the AMPSEAL connectors, crimps and tools are listed in Section *Accessories and Ordering Codes*.

Epec Oy reserves all rights for improvements without prior notice

7.2 Cabling

7.2.1 System Topologies

Generally, cabling should be properly designed and documented to help the initial assembly and maintenance.
It is highly recommended to mark each cable on both ends to avoid confusion and errors.

The cables must be run in a safe route along the machine frame.
When routing cables, avoid interfering objects and pay particular attention to moving parts of the machine.
It is also good to minimize the amount of the connection points of the cable harness to maximize reliability.
Also, all valid safety instructions should be observed when coupling.

- The control units are connected with each other using standardized CAN bus.
- The idea of the Epec embedded control system, is that all the control units are installed close to sensors, encoders and other equipment connected to them.
-
    - This way the amount of the traffic on the CAN bus is minimized and connections can be made using short wires.

Termination resistors

- Generally, the bus cable is terminated at both ends with termination resistors (ISO 11898:1993).

The cable lengths presented here are approximates. Actual cable lengths also depend on the cable quality, the cable type and also on the machine environment (possible interference).

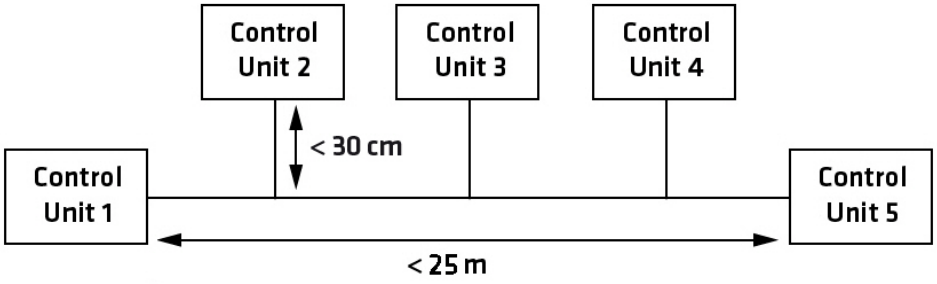

Example 2. Control system topology in theory with maximum bus speed (1000 kbit/s); Control Units in traditional bus arrangement. For more information about the bus speeds, refer to CiA DS-102 standard.

Epec Oy reserves all rights for improvements without prior notice

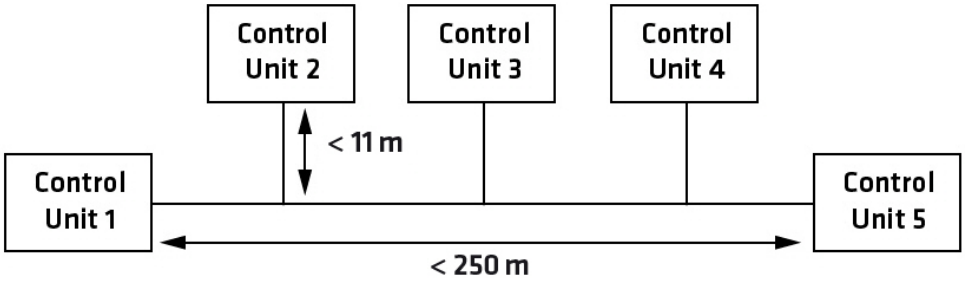

Example 3. Control system topology in theory with 250 kbit/s bus speed; Control Units in traditional bus arrangement. For more information about the bus speeds, refer to CiA DS-102 standard.

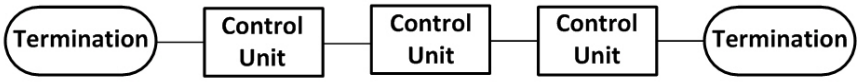

Example 4. The usage of the termination resistor (TR) in a conventional bus. The maximum recommended bus length is directly dependent on the bus speed.
In theory, the maximum length with the maximum speed can be up to 25 meters. If the bus speed is lower, the length can be extended.
The maximum length of the bus depends on the bus speed. For more information about the bus speeds, see the table below / refer to CiA DS-102 standard.

The following table shows some baud rates in general purpose CAN bus networks as well as the maximum bus length for a given baud rate, that CAN in Automation (CiA) international users and manufacturers group has recommended to be used. For more information, refer to CiA DS-102 standard.

CAN bus baud rates and bus lengths according to CiA DS-102 standard

Baudrate	Bus length
1 Mbits/s	25 m
800 kbits/s	50 m
500 kbits/s	100 m
250 kbits/s	250 m
125 kbits/s	500 m
50 kbits/s	1000 m

Epec Oy reserves all rights for improvements without prior notice

7.2.2 CAN Bus Cabling

The CAN bus cable is the neural backbone of the whole system and should be designed and constructed with extra care.

- For information about the CAN bus lengths and baud rates, refer to section *System Topologies*.

Cable

- It is recommended to use high quality and twisted (approx. 1 round / 1 inch) CAN bus cable.
- Normal UTP (Unshielded Twisted Pairs) cable is well suited for distances under approximately 10 meters.
- In longer distances, and especially if there is possibility for electromagnetic interference, it is highly recommended to use shielded and twisted cable for CAN bus, also for shorter distances.
- To avoid electromagnetic interference (EMI), locate the bus cable as far away from high-current carrying cables as possible. Generally, the amount of the connections and connectors should be minimized to maximize security; also all connections should be done carefully.
- The shield grounding must be done only in one end of the cable

Cable shield

Connection example when there is a GND pin available in the control unit:

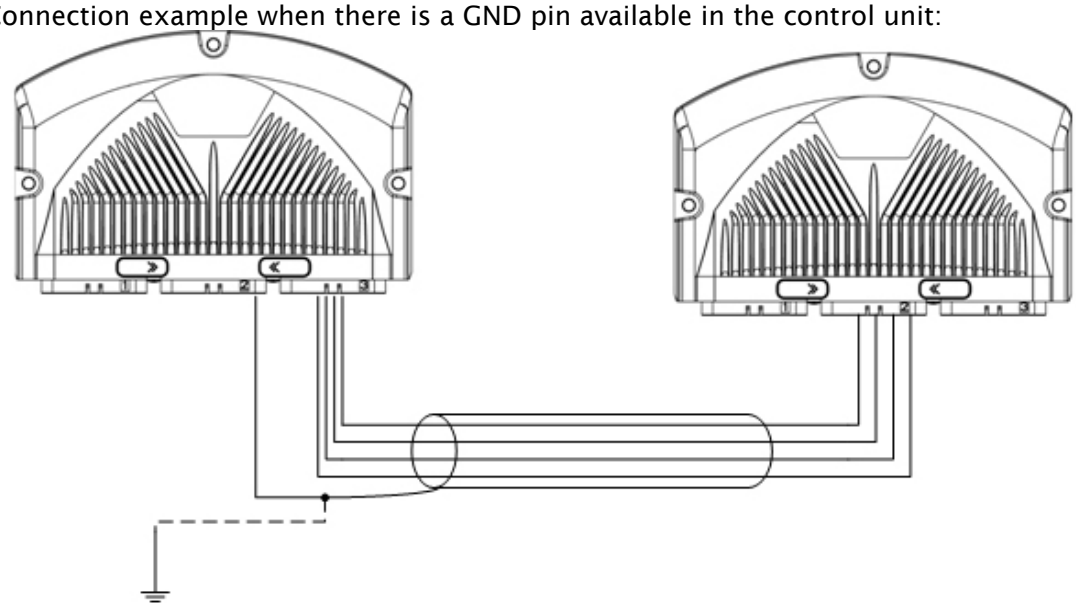

Epec Oy reserves all rights for improvements without prior notice

Connection example when there is not a GND pin available in the control unit:

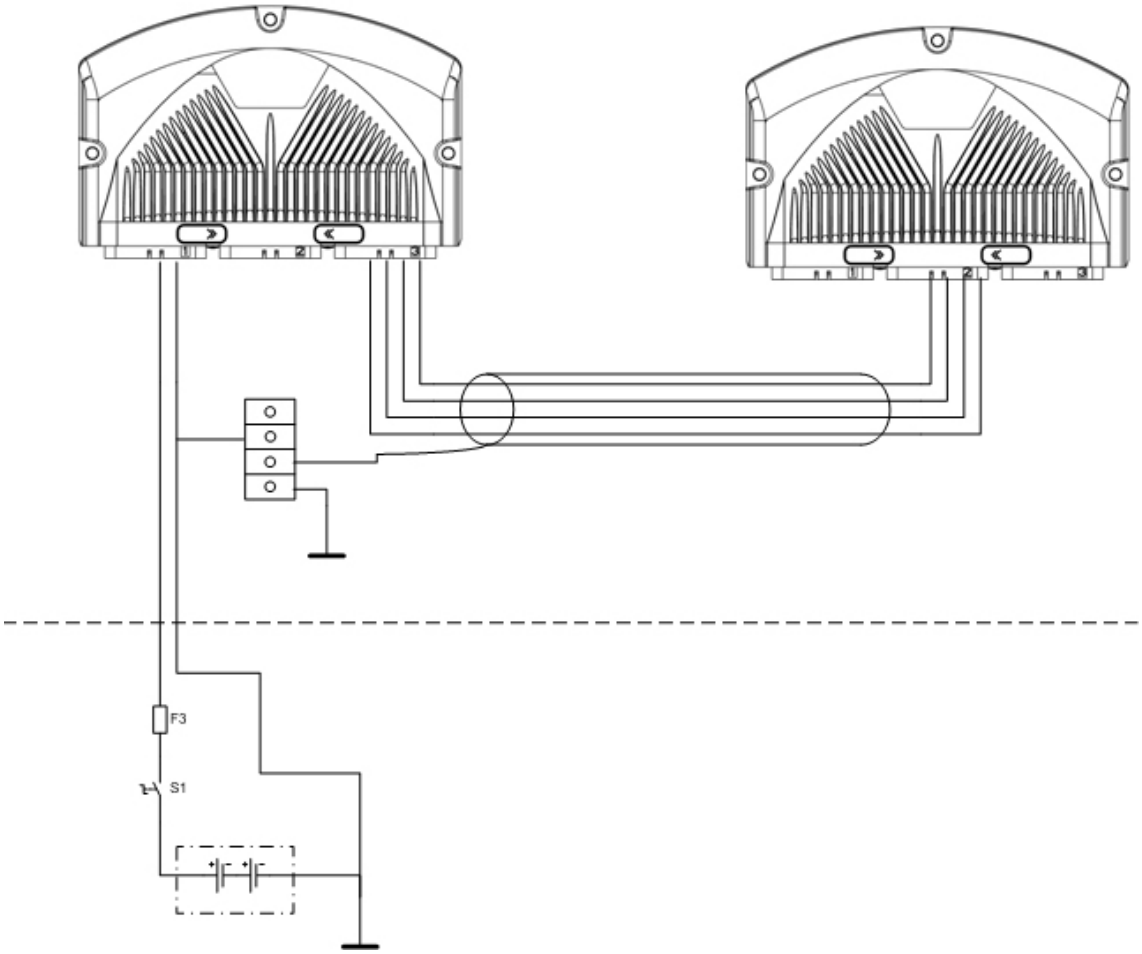

7.2.2.1 CAN cabling for system developers

The following figure describes cabling for CAN communication between Epec control units and a PC.
Ordering codes for the needed hardware are included in the figure.

Epec control units with AMP35 connector, example 1:

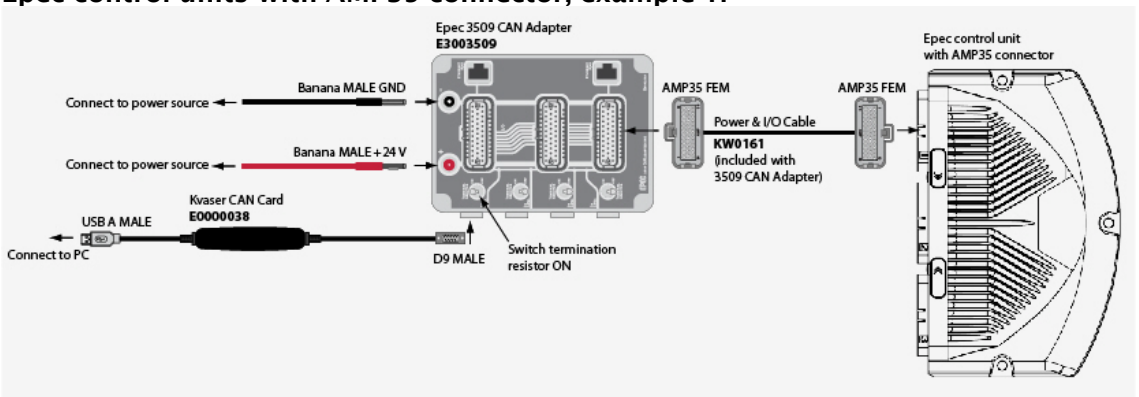

Epec Oy reserves all rights for improvements without prior notice

Epec control units with AMP35 connector, example 2:

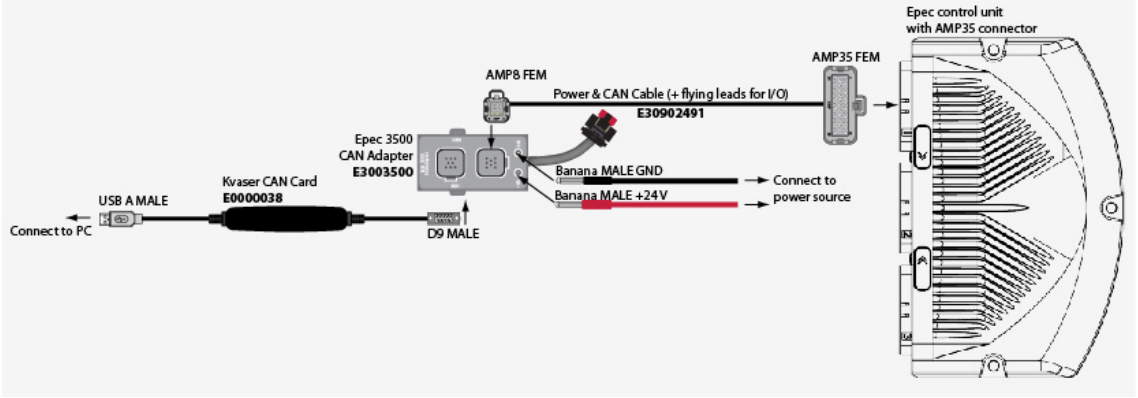

Epec Oy reserves all rights for improvements without prior notice

7.2.3 I/O Cabling

Closed circuit loops are always recommended and mandatory when you are using DO or PWM pin as an input.

To ensure correct measurement, reserve separate GND pin(s) for AI pin(s) and don't use it/them for any other purposes. See cabling example below.

- The cabling for encoders etc. is in many cases supplied together with them.
- In many cases, very simple basic cable may be used, e.g. automobile R2 cable (0,5 or 1,0) by NK Cables.
- Dimensions of the cable should be appropriate for AMP contacts (so that crimping is possible).
  - Refer to AMPSEAL table (in section *Accessories and Ordering Codes*) for dimensions.
  - Take extra care for protecting the cables against physical wear and damage.
- Only one wire can be connected to one AMPSEAL connector pin. However, if more than one wire has to be connected to one connector pin, it has to be connected by branch wiring.
- Some voltage inputs use relatively low voltages.
  - Consider using shielded cables for these encoders etc. especially for longer distances to increase safety
- Using shielded cable is recommended also in joystick connections.

AI - GND cabling examples (use separate GND pin for AI pins):

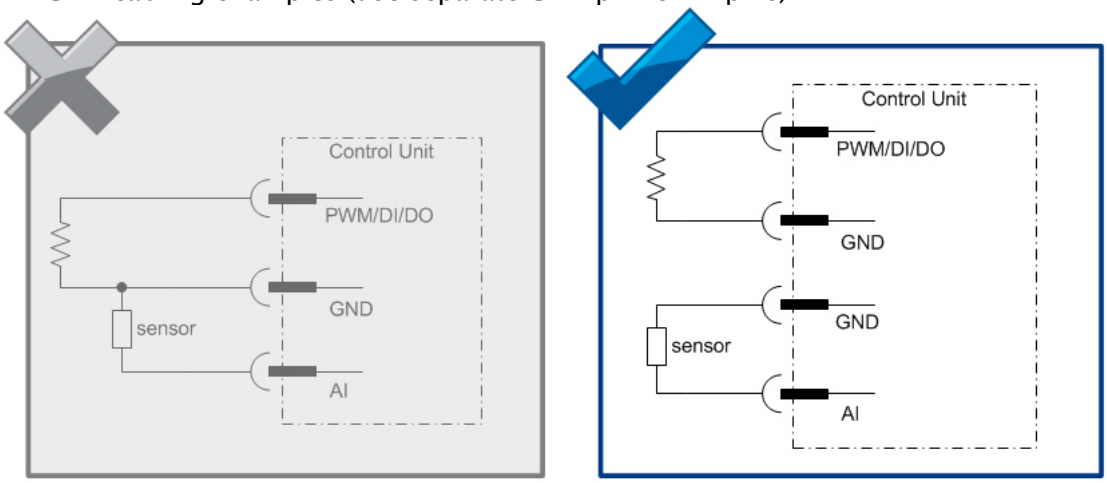

- sensors and encoders must be wired according to the closed-loop principle, i.e. the power for the sensors and encoders is supplied by the control unit they are connected to. This way, it is possible to avoid potential harmful differences, so the MOSFET driven output power switching operates properly.

When designing the sensor and encoder connections, observe single-point grounding. Each control unit connector has several GND pins which should be used.

Refer to section Power supply pins and limitations for accurate pin allocation of connectors.

Epec Oy reserves all rights for improvements without prior notice

7.3 Welding



Welding causes some high current flows and voltage peaks in the machine. It should be noted that the electronics of the control system may be damaged, if the welding current can get through the control unit itself. So, when welding, it should be taken care to prevent high currents from going through the control units or through the CAN bus.

Follow carefully the following instructions.



Disconnect all the connectors from the control units before welding.



Generally, even if the control system power is disconnected, welding should be done carefully and by following appropriate safety measures. Welding grounding should be connected close to the welding point to avoid long distance high current flow through machine frame.

Epec Oy reserves all rights for improvements without prior notice

7.4 System Examples

Loading machine

Cabin control unit

- reads the joysticks and switches
- controls the boom and bucket
- controls the gearing
- controls the steering and brakes
- controls the lights

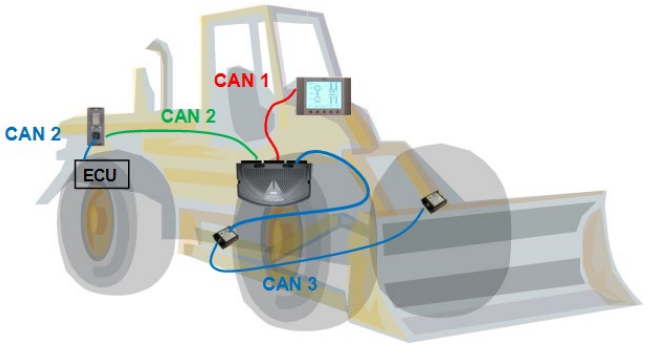

Rear frame control unit

- controls the engine
- controls the hydraulic pumps
- controls the rear lights

Tilt sensors

- measures the frame position
- measures the loader position

Display

- gauge
- diagnostics
- software updating

Dumper

Cabin control unit

- reads the joysticks and switches
- controls the engine
- controls the gearing
- controls the driveshaft brake
- controls the steering and brakes
- controls the dump box

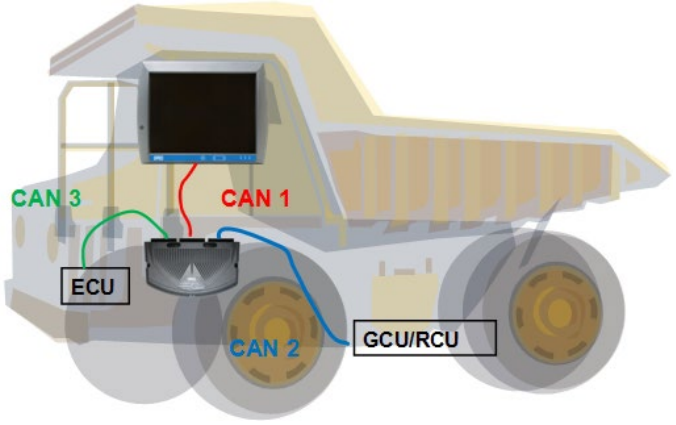

Display

- remote connection
- positioning
- gauge
- diagnostics
- software updating

Epec Oy reserves all rights for improvements without prior notice

Landfill compactor

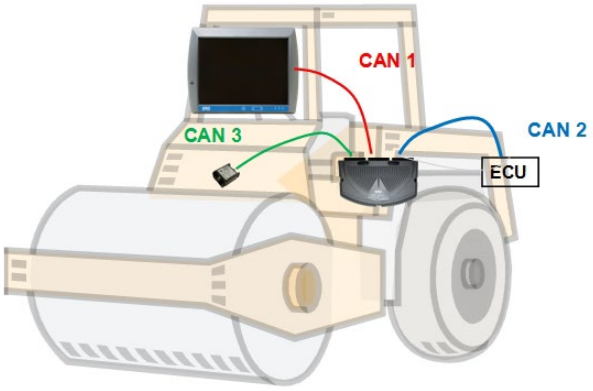

Cabin control unit
- reads the joysticks and switches
- controls the engine
- controls the transmission
- controls the steering
- controls the lights

Tamping sensors
- measures the degree of concentration

Display
- remote connection
- positioning
- gauge
- diagnostics
- software updating

Backhoe

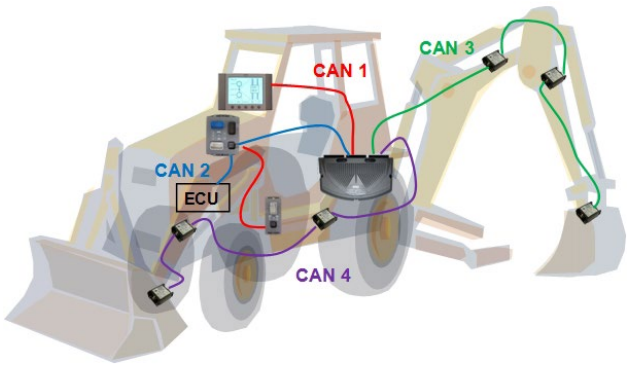

Cabin control unit
- reads the joysticks and switches
- controls the excavator
- controls the roof lights
- booms' position calculation

Engine control unit
- controls the engine
- controls the front loader
- reads the fluid pressures and temperatures

Gearing control unit
- controls the gearing
- controls the suspension

Tilt sensors
- measures the frame position
- measures the excavator and front loader positions

Display
- gauge
- diagnostics
- software updating

Epec Oy reserves all rights for improvements without prior notice

7.5 Accessories and Ordering Codes

Related products

Picture	Product Name	Epec ordering code	Epec data sheet code
	Measuring adapter	E3003510	MAN000512
	CAN adapter	E3003509	MAN000513
	3500 CAN Adapter Box	E3003500	MAN000385
-	External termination resistor	E30901252	-
-	Kvaser CAN Card	E0000038	-

Epec Oy reserves all rights for improvements without prior notice

AMPSEAL Connectors

Epec uses gold plated, locked and sealed AMPSEAL heavy duty connectors for all Epec CAN Control Unit Family products to ensure endurance under extreme conditions.

- All connectors are mechanically keyed to mate only with identical colors

AMPSEAL product	TE Connectivity ordering code	Epec ordering code
AMP 35 pin grey plug (female)	776164-4	KX0351
AMP35 FEM (grey) - flying leads (2 m)		E30902451
Power supply & CAN cable for 3000, 4000 and 5000 series control units (2 m, AMP35 - AMP8 (Power & 2 x CAN), 29 x flying leads (other I/O pins))		E30902491
AMP 35 pin blue plug (female)	776164-5	KX0352
AMP35 FEM (blue) - flying leads (2 m)		E30902453
AMP 35 pin black plug (female)	776164-1	KX0353
AMP35 FEM (black) - flying leads (2 m)		E30902452
Contact for AMP plug assembly	770854-3	KX0010
Crimping tool	58529-1	TT0018
Wire relief for a connector	776463-1	KX0354

AMPSEAL cable dimensions

Size		Insulation diameter range	Strip length ±0,4
mm²	AWG		AWG
0,5	20	1,7 to 2,7	5,1
0,8	18		
1,4	16		
1,5	---	2,2 to 2,4	

Typical hand crimping tool e.g.: AMP Procrimper 58529-1 (TE Connectivity), Epec ordering code TT0018

Epec Oy reserves all rights for improvements without prior notice