Epec 3610 Control Unit

Technical Manual and Cabling Instructions

MAN000668



Epec Oy reserves all rights for improvements without prior notice

Epec Oy	Postal address	Phone	Fax	Internet
Tiedekatu 6	PL/P.O.Box 194	+358-(0)20-7608 111	+358-(0)20-7608 110	www.epec.fi
FIN-60320 Seinäjoki	FIN-60101 Seinäjoki, Finland			

Document version history

Date	Notes
19.06.2018	Updated Sections: Warranty, Technical Data, DI/PI_Type119, DO_GND/DI/PWM_Type048
27.06.2017	First released version

Epec Oy reserves all rights for improvements without prior notice

Epec Oy	Postal address	Phone	Fax	Internet
Tiedekatu 6	PL/P.O.Box 194	+358-(0)20-7608 111	+358-(0)20-7608 110	www.epec.fi
FIN-60320 Seinäjoki	FIN-60101 Seinäjoki, Finland			

Table of Contents

Use of Symbols 5
Basic Skills Required 6
Safety Guidelines 6
Warranty 7
Limited Liability 7
Environmental Statement 7
I/O List 12
Configurable I/Os 14
PWM/DO/DI/CM_Type114_0 15
Functional block diagram 17
DO_GND/DI/PWM_Type048 18
Output (PWM/DO) 18
Input (DI) 18
Functional block diagram 19
DI/PI_Type119 20
Functional block diagram 21
AI/DI_Type116 22
DI 22
Functional block diagram 23
AI/DI_Type118 24
DI 24
Functional block diagram 24
DI/PI_Type039_3 25
Functional block diagram 26
Loader BSL Pin 27
+5V REF_Type041_4 28
Protection features 28
Voltage monitoring 28
Functional block diagram 29
Diagnostics 30
OVERLOAD 30
OVERVOLTAGE 31
Power Supply 32
Overvoltage Protection 32

Epec Oy reserves all rights for improvements without prior notice

Epec Oy	Postal address	Phone	Fax	Internet
Tiedekatu 6	PL/P.O.Box 194	+358-(0)20-7608 111	+358-(0)20-7608 110	www.epec.fi
FIN-60320 Seinäjoki	FIN-60101 Seinäjoki, Finland			

Power Consumption 32
CAN Bus 34
CAN interface 34
CAN bus connection pins 35
Temperature and Voltage Monitoring 36
Temperature 36
LED Indicator 37
Error Log 40
EMC Tests 41
Unit Dimensions 47
Mounting and Cleaning 48
Plugging and unplugging the cables/connectors 51
Cabling 53
System Topologies 53
CAN Bus Cabling 56
I/O Cabling 59
Power Supply Cabling 62
Emergency Stop 64
Welding 65
Accessories and Ordering Codes 66

Epec Oy reserves all rights for improvements without prior notice

Epec Oy	Postal address	Phone	Fax	Internet
Tiedekatu 6	PL/P.O.Box 194	+358-(0)20-7608 111	+358-(0)20-7608 110	www.epec.fi
FIN-60320 Seinäjoki	FIN-60101 Seinäjoki, Finland			

Preface

Use of Symbols

This manual uses the following symbols to point out important information or safety instructions:



The information icon indicates important information and issues to be noted for the reader.



The caution icon indicates very important information or a warning. If the advices are ignored, it can result in personal injury or damage to software or equipment.



The (electrical) warning icon indicates a hazard which could cause an electrical danger and/or a personal injury.

The following symbols are used on Epec's product labels:

CE compatibility
This symbol indicates that the product described in this manual complies with the requirements set in the CE Standard.

WEEE symbol
This symbol indicates that the product must be sent to separate collection facilities for recovery and recycling when the end-user wishes to discard the product.

E17 Approval
This product is certified with normal automotive (E17) EMC (electromagnetic compatibility) standards.

Epec Oy reserves all rights for improvements without prior notice

Epec Oy	Postal address	Phone	Fax	Internet
Tiedekatu 6	PL/P.O.Box 194	+358-(0)20-7608 111	+358-(0)20-7608 110	www.epec.fi
FIN-60320 Seinäjoki	FIN-60101 Seinäjoki, Finland			

Basic Skills Required

The user of this document must have basic knowledge of machine controlling, CAN communication, PLCopen programming according to IEC61131-3 and should have skills to use CODESYS 2.3/ programming environment.

Refer to CODESYS manual for further information concerning the programming environment and required installations.

Refer to CAN and CANopen documentation from CAN in Automation (CiA) for further information on communication issues.

Safety Guidelines

The user of this documentation should follow general machine safety guidelines, directives and regulation appropriate to their country or market area.

A separate safety analysis is always recommended for the machine and its control system. The features of this product should be well documented in machine and control system documents so that the machine operator has the right information how to operate the machine correctly and safely.

This product is designed to be used only for machine controlling purposes. The manufacturer does not assume any responsibility for this product being fit for any particular application, unless otherwise expressly stated in writing by the manufacturer.

This product complies with those certifications and standards that are mentioned in this manual. The manufacturer does not guarantee that this product complies with any other certification, standard or test other than mentioned in this manual.

This product is not field serviceable, so it should not be opened in any situation.

External fuses should be installed for the product or the system power supply.

The system should be designed and constructed according to the Epec general mounting and cabling instruction document.

Epec Oy reserves a right to improve its products without a further notice.

Epec Oy reserves all rights for improvements without prior notice

Epec Oy	Postal address	Phone	Fax	Internet
Tiedekatu 6	PL/P.O.Box 194	+358-(0)20-7608 111	+358-(0)20-7608 110	www.epec.fi
FIN-60320 Seinäjoki	FIN-60101 Seinäjoki, Finland			

Warranty

Information concerning the warranty of this product can be found from *Epec General Sales and Warranty Terms.*

For more information, contact *sales@epec.fi*

Limited Liability

The manufacturer shall under no circumstances be liable for loss of production, loss of profit, loss of use or any other consequential damages and/or indirect losses, whatever their cause may be. In case claims based on product liability are brought against the Manufacturer for which claims the manufacturer may be liable, the manufacturer's liability is limited to the extent normally covered under normal product liability insurances.

The buyer shall compensate the manufacturer to the extent that the manufacturer might be liable to pay damages as a result of claims based on product liability according to paragraph above.

Environmental Statement

The manufacturer uses ISO 14001: 2015 environmental certified processes and materials to manufacture products. The manufacturer undertakes to arrange for the recycling and scrapping of the products that are returned to the manufacturer by the buyer and/or the products that are received by the Manufacturer in connection with maintenance services performed as a result of that repairing of the products is deemed by the Manufacturer to be inappropriate.

The manufacturer will charge a scrapping fee from the buyer according to the manufacturer's price list in force from time to time. No scrapping fee will, however, be charged for products that are received by the manufacturer during the warranty period.

WEEE

This product complies with the European Community Directive 2012/19/EU on waste electrical and electronic equipment (WEEE) encouraging and setting specific criteria for the collection, handling and recycling of electric and electronic waste.

Epec Oy reserves all rights for improvements without prior notice

Epec Oy	Postal address	Phone	Fax	Internet
Tiedekatu 6	PL/P.O.Box 194	+358-(0)20-7608 111	+358-(0)20-7608 110	www.epec.fi
FIN-60320 Seinäjoki	FIN-60101 Seinäjoki, Finland			

Product Overview



Epec 3610 Control Unit is a compact and robust multifunction controller with 16/32 bit processor and high calculating power. Epec 3000 product platform is fully compatible to the existing Epec product portfolio. Some of the advances of the Epec 3610 Control Unit are listed below.

Multifunctional Efficiency

- A multifunction controller
  - 16/32 bit processor
  - high calculating power
- Can be used used in a CAN control unit system as a multifunction controller with different kinds of sensors and actuators, such as
  - proportional valves,
  - servo motors, and
  - electro-hydraulic components
- Provides control system solutions for both centralized and distributed intelligence systems
- Fully compatible with the existing Epec product portfolio

Epec Oy reserves all rights for improvements without prior notice

Epec Oy	Postal address	Phone	Fax	Internet
Tiedekatu 6	PL/P.O.Box 194	+358-(0)20-7608 111	+358-(0)20-7608 110	www.epec.fi
FIN-60320 Seinäjoki	FIN-60101 Seinäjoki, Finland			

Mechanics & hardware

- Robust, light and leak proof zinc/plastic cover has been widely tested against different chemicals and environmental conditions
- The shape of the casing works to protect the electronics inside against mechanical wear.
- Three point anchorage confirms firm mounting also on irregular surfaces
- Signal LED for quick status check and fault detection
- Equipped with gold plated, heavy duty AMPSEAL connectors
- The connector is colour coded and mechanically keyed
- One CAN is equipped with double pins, which makes cabling easier since there is no need for branches in the wire harness.
- Made in Finland

Versatile I/O capabilities

- Total of 22 I/O pins
- Most pins have multipurpose features
- All I/O pins are equipped with a short-circuit protection

Application programming

- Application downloading is possible through CAN bus
- Epec products are based on PLCopen and CANopen®, which make them easily scalable to meet requirements for both small and large machines
- Open I/O and communication interface, thus making it possible to connect
    - sensors,
    - actuators,
    - joysticks, and
    - other devices

  from other manufacturers to optimize the whole machine environment, both technically and ergonomically.
- Internal diagnostics which makes it possible to
    - detect e.g. overvoltage and overtemperature alarms and
    - program customized log applications

Epec Oy reserves all rights for improvements without prior notice

Epec Oy	Postal address	Phone	Fax	Internet
Tiedekatu 6	PL/P.O.Box 194	+358-(0)20-7608 111	+358-(0)20-7608 110	www.epec.fi
FIN-60320 Seinäjoki	FIN-60101 Seinäjoki, Finland			

Technical Data

Processor	16/32 bit CPU, 100 MHz
Memory	Flash memory: total 1600 kbytes RAM memory: 138 kbyte (112 kbyte for PLCopen application variables) Non-volatile memory: 2 kbyte PLCopen application size up to 768 kbyte
Power	Nominal supply voltage 12/24 VDC systems (8,5 ... 33 VDC) Idle power consumption 1,3 W (+24 VDC, no external load)
REF voltage outputs	+5 V
Diagnostics	Signal LED (green/red) Supply voltage Unit temperature REF voltage monitoring Internal voltage monitoring
Protection functions	Overvoltage protection Short-circuit protection for outputs
Programming	CODESYS 2.3
Software installation	Download via CAN1
Protection class	IP67
Size / Outer dimensions	138 x 108 x 44,5 mm 5.433 x 4.252 x 1.752 in
Weight	0,44 kg 0.97 lbs
Case material	Zinc / plastic
Operating temperature	-40... +85°C -40...+185°F

Epec Oy reserves all rights for improvements without prior notice

Epec Oy
Tiedekatu 6
FIN-60320 Seinäjoki

Postal address
PL/P.O.Box 194
FIN-60101 Seinäjoki,
Finland

Phone
+358-(0)20-7608 111

Fax
+358-(0)20-7608 110

Internet
www.epec.fi

Storage temperature	-40... +85°C -40...+185°F	
Connectors	1 x AMP35 (grey)	
Communications / Interfaces	2 x CAN 2.0 B	
I/O pins total	22	
Outputs		
	6x	PWM/DO/CM (current measurement, sourcing, up to 3 A, PWM frequency by application)
	2x	DO_GND/DI/PWM (sinking)
Inputs	6x	DI/PI
	5x	AI/DI (0-5 V / 0-22 mA selection by application, pull-up selection by application)
	3x	AI/DI (0-10 V)

Epec Oy reserves all rights for improvements without prior notice

Epec Oy	Postal address	Phone	Fax	Internet
Tiedekatu 6	PL/P.O.Box 194	+358-(0)20-7608 111	+358-(0)20-7608 110	www.epec.fi
FIN-60320 Seinäjoki	FIN-60101 Seinäjoki, Finland			

Input/Output Specifications

I/O List

The connector is placed in the control unit according to the following figure:

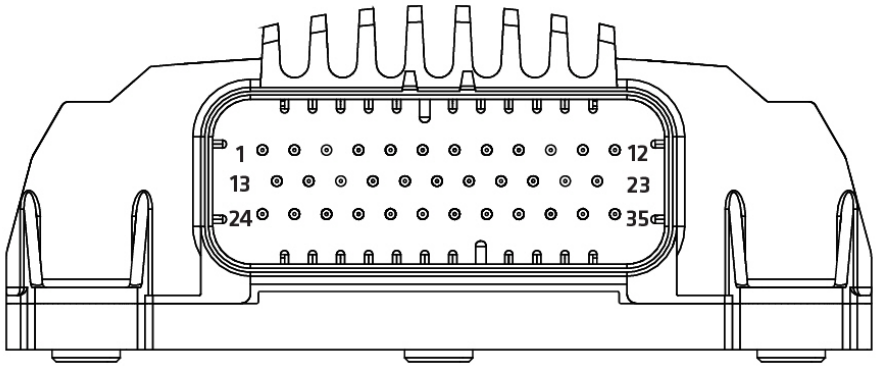

The following table lists the pins according their pin number. Other columns offer quick information about the pin and links for more information.

Pin number	Pin type	Details	Current / Voltage	Description
Row 1:				
X1.1	GND			Supply GND connection
X1.2	PWM/DO/DI/CM_Type114_0	10 kΩ GND	Nominal current 3 A	
X1.3	PWM/DO/DI/CM_Type114_0	10 kΩ GND	Nominal current 3 A	
X1.4	CAN2H			
X1.5	CAN1H			
X1.6	CAN1H			
X1.7	DO_GND/DI/PWM_Type048	10 kΩ GND	Nominal current 3 A	
X1.8	DO_GND/DI/PWM_Type048	10 kΩ GND	Nominal current 3 A	
X1.9	PWM/DO/DI/CM_Type114_0	10 kΩ GND	Nominal current 3 A	
X1.10	PWM/DO/DI/CM_Type114_0	10 kΩ GND	Nominal current 3 A	
X1.11	PWM/DO/DI/CM_Type114_0	10 kΩ GND	Nominal current 3 A	
X1.12	PWM/DO/DI/CM_Type114_0	10 kΩ GND	Nominal current 3 A	
Row 2:				
X1.13	LOADER BSL			
X1.14	AI/DI_Type116	2,2 kΩ +5 V / 84,2 kΩ GND / 220 Ω GND	0-5 V / 0-2,5 V / 0-22 mA	Optimized PT1000 sensor support. Select range 0-2,5 V when using with PT1000.
X1.15	AI/DI_Type116	2,2 kΩ +5 V / 84,2 kΩ GND / 220 Ω GND	0-5 V / 0-2,5 V / 0-22 mA	Optimized PT1000 sensor support. Select range 0-2,5 V when using with PT1000.

Epec Oy reserves all rights for improvements without prior notice

Epec Oy
Tiedekatu 6
FIN-60320 Seinäjoki

Postal address
PL/P.O.Box 194
FIN-60101 Seinäjoki,
Finland

Phone
+358-(0)20-7608 111

Fax
+358-(0)20-7608 110

Internet
www.epec.fi

X1.16	CAN2L			
X1.17	CAN1L			
X1.18	CAN1L			
X1.19	CAN1L_Terminator			
X1.20	AI/DI_Type118	82 kΩ GND	0-10 V	
X1.21	AI/DI_Type118	82 kΩ GND	0-10 V	
X1.22	DI/PI_Type119	10 kΩ GND		
X1.23	DI/PI_Type119	10 kΩ GND		
Row 3:				
X1.24	Power Supply			Supply connection
X1.25	AI/DI_Type116	2,2 kΩ +5 V / 84,2 kΩ GND / 220 Ω GND	0-5 V / 0-2,5 V / 0-22 mA	Optimized PT1000 sensor support. Select range 0-2,5 V when using with PT1000.
X1.26	AI/DI_Type116	2,2 kΩ +5 V / 84,2 kΩ GND / 220 Ω GND	0-5 V / 0-2,5 V / 0-22 mA	Optimized PT1000 sensor support. Select range 0-2,5 V when using with PT1000.
X1.27	AI/DI_Type116	2,2 kΩ +5 V / 84,2 kΩ GND / 220 Ω GND	0-5 V / 0-22 mA	
X1.28	REF +5V_Type041_4		+5V 270 mA	
X1.29	DI/PI_Type119	10 kΩ GND		
X1.30	GND			
X1.31	DI/PI_Type119	10 kΩ GND		
X1.32	DI/PI_Type039_3	10 kΩ GND		
X1.33	GND			
X1.34	DI/PI_Type039_3	10 kΩ GND		
X1.35	AI/DI_Type118	82 kΩ GND	0-10 V	

Epec Oy reserves all rights for improvements without prior notice

Epec Oy
Tiedekatu 6
FIN-60320 Seinäjoki

Postal address
PL/P.O.Box 194
FIN-60101 Seinäjoki, Finland

Phone
+358-(0)20-7608 111

Fax
+358-(0)20-7608 110

Internet
www.epec.fi

Configurable I/Os

The control unit contains inputs and outputs or, in other words, I/O pins of many different types. There are, for example, outputs which source current and outputs which sink current. Furthermore, there are I/O pins which can be used as inputs or as outputs at the control of the application programmer.

The following table contains a summary of configurable I/O pins in Epec 3610 control unit:

Max Amount	Pin Type	Info	DI	AI	Current measurement	PI	DO		PWM
							PNP sourcing	NPN sinking	
6	PWM/DO/DI/CM_Type114_0	3 A	x		x		x		x
3	AI/DI_Type0118	0-10 V	x	x					
5	AI/DI_Type0116	0-5 V / 0-22 mA	x	x					
2	DO_GND/DI/PWM_Type048	3 A	x					x	
4	DI/PI_Type119	pull-down to GND	x			x			
2	DI/PI_Type039_3	pull-down to GND	x			x			

Epec Oy reserves all rights for improvements without prior notice

Epec Oy
Tiedekatu 6
FIN-60320 Seinäjoki

Postal address
PL/P.O.Box 194
FIN-60101 Seinäjoki, Finland

Phone
+358-(0)20-7608 111

Fax
+358-(0)20-7608 110

Internet
www.epec.fi

PWM/DO/DI/CM_Type114_0

Output (PWM/DO)

- This type of pin is a current sourcing output with a pull-down resistor
- This pin includes a current measurement feature (the pin connects the load to a positive supply voltage through the shunt resistors)
- These outputs have a switching element called a smart FET. It has integrated features to protect itself and also the external pin, wiring and actuator.
- These outputs are capable of generating pulse width modulated (PWM) output signals.
- When used as an output, the status feature indicates the output FET's state



It is recommended to use the function blocks in *DigitalOutputDiagnostics* library to protect and diagnose outputs when used as digital outputs. For more information, refer to *Epec Programming and Libraries Manual*.

Current feedback

- The application can control the current with a current measurement feature

Input (DI)

- A pin of this type can be used as digital input by using the output state monitoring feature.
  - In those cases the output functionality of the pin must be kept in off state.
- This pin can be used also with PNP-type sensors
- It must be taken care in system design that the output unintentionally switching to on state causes no harm to the system.
- It’s highly recommended to use closed loop connections when the output pin is used as an input. By keeping this simple principle in your mind you will avoid many unknown problems later on.

Epec Oy reserves all rights for improvements without prior notice

Epec Oy	Postal address	Phone	Fax	Internet
Tiedekatu 6	PL/P.O.Box 194	+358-(0)20-7608 111	+358-(0)20-7608 110	www.epec.fi
FIN-60320 Seinäjoki	FIN-60101 Seinäjoki, Finland			

Electrical characteristics

Symbol	Parameter	Conditions	Min	Max	Units
R_{Shunt}	Shunt resistance		typ. 15		mΩ
$I_{o\text{-}range}$	Nominal Current Measuring Range		0	3	A
I_o	Nominal Output Current	Output On	0	3	A
f_{PWM}	PWM Frequency	(Note 1)	10	3000	Hz
$Duty_{PWM}$	PWM Duty cycle	(Note 2, 8)	0 to 100		%
Res_{PWM}	PWM Resolution	(Note 3)	0,1		%
Digital status input					
R_I	Input Resistance	Output Off; Referenced to GND	typ. 10		kΩ
V_{IH}	Input High Voltage	Output Off (Note 6)	4,1	U_{in}	V
V_{IL}	Input Low Voltage	Output Off	-0,5	3,3	V
f_I	Input frequency (digital input)	50% duty cycle (Note 3, 4)		$1/ 2t_C$	Hz
t_I	Digital Status Input Pulse Width	(Note 2, 4, 5)	$> t_C$		ms
C_O	Output pin capacitance		typ. 1		nF

Note 1: Frequency of a (PWM) Pulse Width Modulation is = 1 / Period
Note 2: The duty cycle is defined as the percentage of digital 'high' to digital 'low' signals present during a PWM period.
Note 3: The PWM resolution is defined as the maximum number of pulses that you can pack into a PWM period.
Note 4: tC denotes software cycle time.
Note 5: The pulse width must be greater that the software cycle time. For example with 50/50 pulse ratio, the pulse frequency is 1 / (2*pulse width)
Note 6: Exceeding the max value might cause permanent damage.

Epec Oy reserves all rights for improvements without prior notice

Epec Oy	Postal address	Phone	Fax	Internet
Tiedekatu 6	PL/P.O.Box 194	+358-(0)20-7608 111	+358-(0)20-7608 110	www.epec.fi
FIN-60320 Seinäjoki	FIN-60101 Seinäjoki, Finland			

Functional block diagram

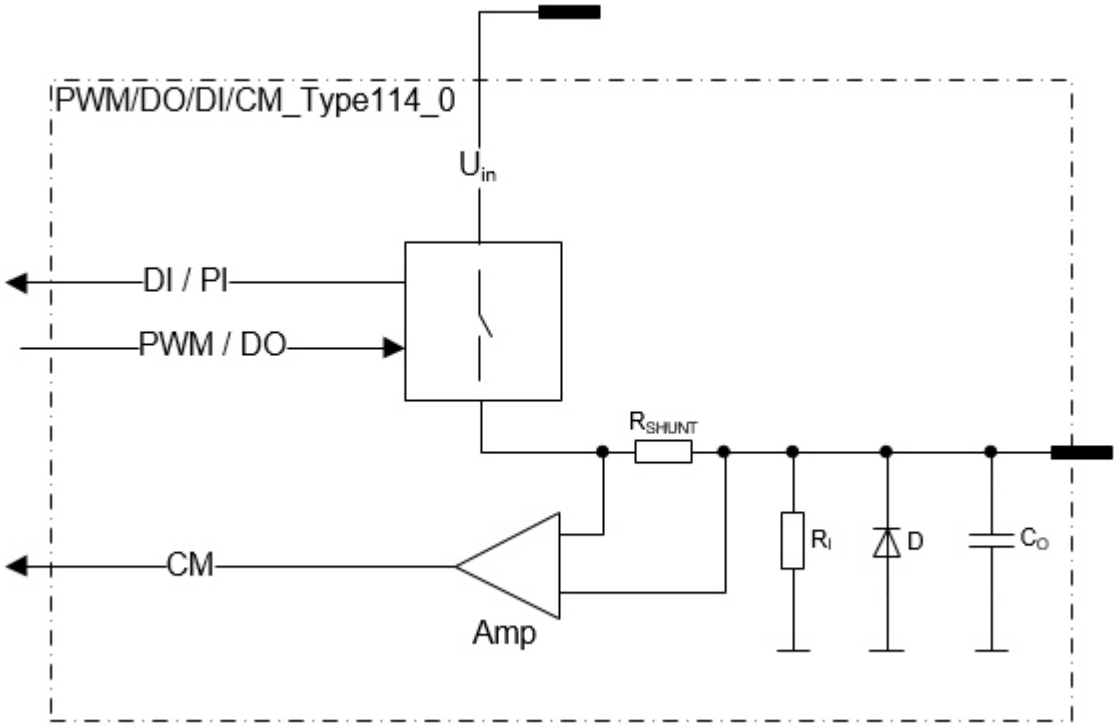

Epec Oy reserves all rights for improvements without prior notice

Epec Oy	Postal address	Phone	Fax	Internet
Tiedekatu 6	PL/P.O.Box 194	+358-(0)20-7608 111	+358-(0)20-7608 110	www.epec.fi
FIN-60320 Seinäjoki	FIN-60101 Seinäjoki, Finland			

DO_GND/DI/PWM_Type048

Closed circuit loops are mandatory when using this pin.
Closed circuit loop means that the current from the control unit to the sensor must return to the same control unit, see the figures in section *I/O Cabling*.

Output (PWM/DO)

- This kind of pins are current sinking outputs.
  - In other words, pins connect the load to the ground.
- The application program can also simultaneously monitor the actual state of the pin.
  - This feature makes it possible to detect open loads and short circuits to the supply voltage.
  - These outputs are capable of generating pulse width (PWM) output signals

It is recommended to use the function blocks in *DigitalOutputDiagnostics* library to protect and diagnose outputs when used as digital outputs. For more information, refer to *Epec Programming and Libraries Manual*.

Input (DI)

- A pin of this type can also be used as an input by using the output state monitoring feature.
- In those cases the output functionality of the pin must be kept in off state.
- It must be taken care in system design that the output unintentionally switching to on state causes no harm to system.

Electrical characteristics

Symbol	Parameter	Conditions	Min	Max	Units
R_O	Output Resistance	Output On		0,12	Ω
I_I	Nominal Input Current	Output On		3	A
I_L	Leakage Current	Output Off	typ. 3		mA
f_{PWM}	PWM Frequency	(Note 4)	10	3000	Hz
$Duty_{PWM}$	PWM Duty cycle	(Note 1)	0 to 100		%
Res_{PWM}	PWM Resolution	(Note 5)	0,1		%

Epec Oy reserves all rights for improvements without prior notice

Epec Oy
Tiedekatu 6
FIN-60320 Seinäjoki

Postal address
PL/P.O.Box 194
FIN-60101 Seinäjoki,
Finland

Phone
+358-(0)20-7608 111

Fax
+358-(0)20-7608 110

Internet
www.epec.fi

Digital status input					
R_I	Input Resistance	Output Off	typ. 10		kΩ
V_{IH}	Input High Voltage	Output Off	3,5	U_{in}	V
V_{IL}	Input Low Voltage	Output Off	-0,5	1,5	V
f_I	Input frequency	50% duty cycle (Note 1, 2)		1/ $2t_C$	Hz
t_I	Input Pulse Width	(Note 2, 3)	> t_C		ms
C_I	Input Pin Capacitance		typ. 1		nF

Note 1: The duty cycle is defined as the percentage of digital 'high' to digital 'low' signals present during a PWM period.
Note 2: t_C denotes the software cycle time.
Note 3: The pulse width must be greater that the software cycle time. For example with 50/50 pulse ratio, the pulse frequency is 1 / (2*pulse width)
Note 4: Frequency of a (PWM) Pulse Width Modulation is = 1 / Period
Note 5: The PWM resolution is defined as the maximum number of pulses that you can pack into a PWM period.

Functional block diagram

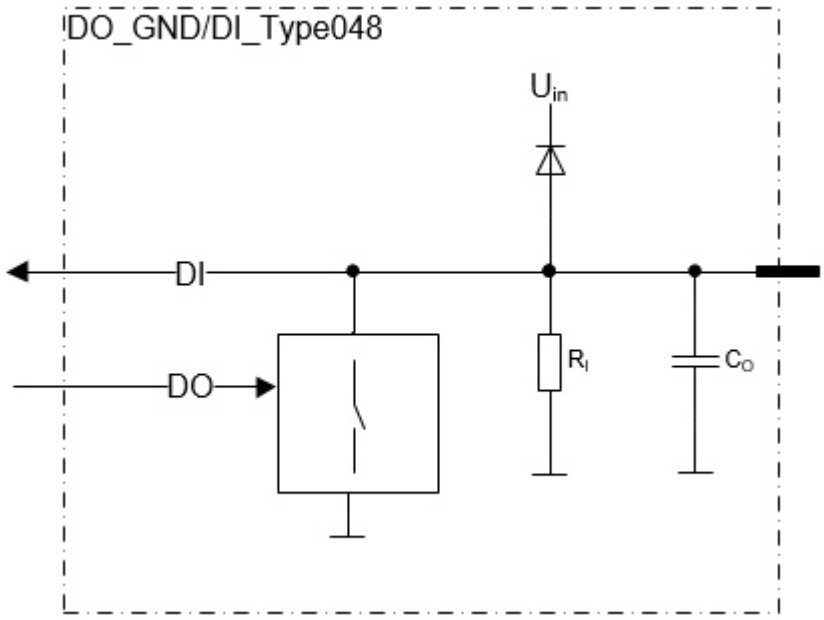

Epec Oy reserves all rights for improvements without prior notice

Epec Oy
Tiedekatu 6
FIN-60320 Seinäjoki

Postal address
PL/P.O.Box 194
FIN-60101 Seinäjoki,
Finland

Phone
+358-(0)20-7608 111

Fax
+358-(0)20-7608 110

Internet
www.epec.fi

DI/PI_Type119

- This type of pin is a digital input (DI) including a pulse counting (PI) feature.
- This kind of pins have a pull-down resistor to ground
- Pulse inputs can be used as a 1 or 2 channel pulse counter and they have a reset possibility. For more information, refer to Epec Programming and Libraries Manual, section *Programming 3610> I/O > Pulse Inputs.*
- Includes hysteresis

Electrical characteristics

Symbol	Parameter	Conditions	Min	Max	Units
R_I	Input Resistance	Referenced to GND		10	kΩ
V_{level}	Voltage level	Unconnected pin	typ. 0		V
V_{IH}	Input High Voltage	Overload conditions (Note 1, 6)	3,3	33	V
V_{IL}	Input Low Voltage	(Note 6)	-0,5	1,7	V
f_I	Input Frequency (frequency measurement and pulse counting)	(Note 4, 5)		20	kHz
	Input Frequency (digital inputs)	(Note 2, 3)		1/ $2t_C$	kHz
t_I	Input Pulse Width		0,025	10000	ms
C_I	Input Capacitance		typ. 1		nF

Note 1: Exceeding the max value might cause damage to input.
Note 2: t_C denotes the software cycle time in milliseconds.
Note 3: The pulse width must be greater that the software cycle time. For example with 50/50 pulse ratio, the pulse frequency is 1 / (2*pulse width)
Note 4: The maximum value can be reached with 50 % duty cycle.
Note 5: The maximum frequency sum for all the pins is 40 kHz.
Note 6: Includes hysteresis. The input state is maintained until the second voltage limit is exceeded:

Epec Oy reserves all rights for improvements without prior notice

Epec Oy	Postal address	Phone	Fax	Internet
Tiedekatu 6	PL/P.O.Box 194	+358-(0)20-7608 111	+358-(0)20-7608 110	www.epec.fi
FIN-60320 Seinäjoki	FIN-60101 Seinäjoki, Finland			

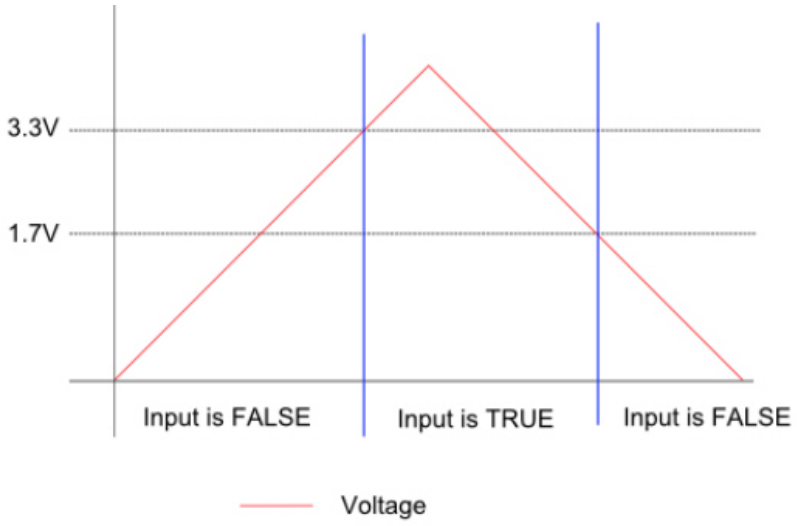

Functional block diagram

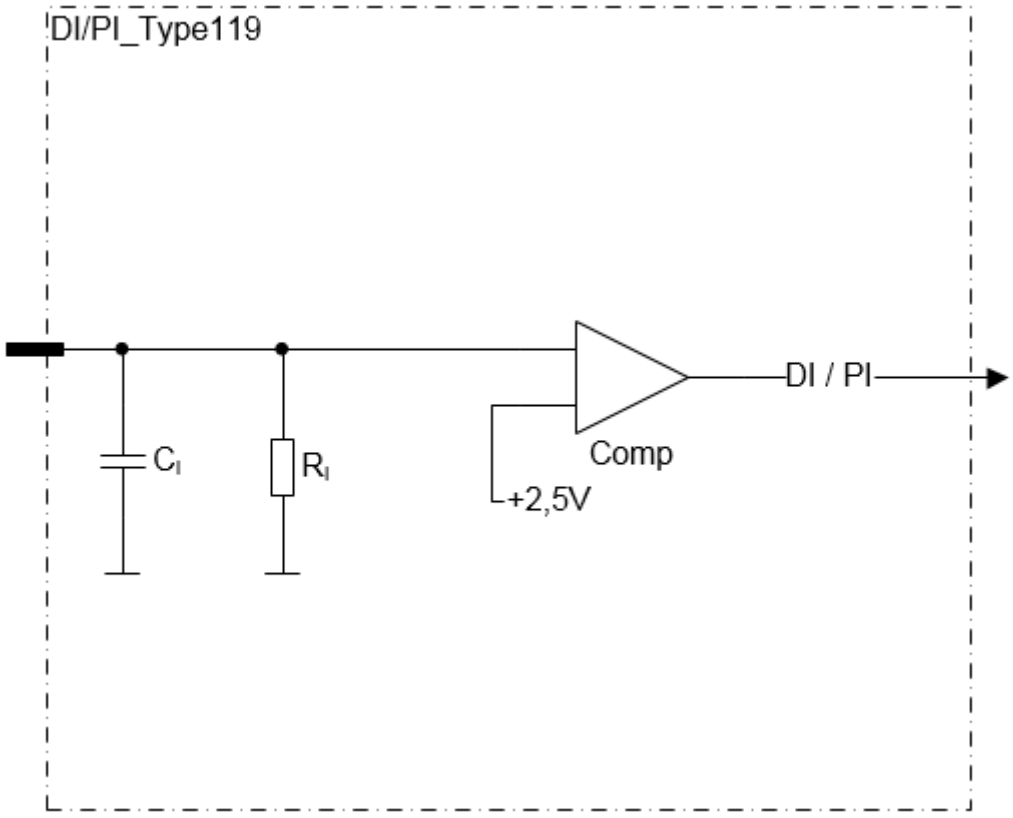

Epec Oy reserves all rights for improvements without prior notice

Epec Oy	Postal address	Phone	Fax	Internet
Tiedekatu 6	PL/P.O.Box 194	+358-(0)20-7608 111	+358-(0)20-7608 110	www.epec.fi
FIN-60320 Seinäjoki	FIN-60101 Seinäjoki, Finland			

AI/DI_Type116

- These pins are analog inputs
- The configurable features are controlled by two control signals:
  - One control signal is for selecting:
    - Voltage mode: High impedance input for signal from 0 to 5 V with or without pull-up.
    - Current mode: Low impedance input for signal from 0 to 22 mA.
  - One control signal is for selecting (when in voltage mode):
    - Pull-up mode to +5 V by a resistor
    - Pull-down mode to GND by a resistor
- The input impedance of each pin when using current mode is controlled by a bit in output memory (%Q)

Pins 1.14, 1,15, 1.25,1.26 have optimized PT1000 sensor support. When using with PT1000, select range 0-2,5 V for the pin (with Epec MultiTool).

When configured to current mode, analog inputs can be protected against overvoltage by using *3000AnalogInputProtection* programming library. For more information, refer to *Epec Programming and Libraries Manual*.

DI

- These pins can also be used as digital inputs by using an application library.
- The pin must be configured to voltage mode when using as digital input

Electrical characteristics

Symbol	*Parameter*	*Conditions*	*Min*	*Max*	*Units*
V_I	Input Voltage measuring range		0	5	V
R_I	Input Resistance	Pull-up voltage mode (referenced to +5 V)	typ. 2,2		kΩ
		Pull-down voltage mode (referenced to GND)	typ. 84,2		kΩ
		Current mode	typ. 220		Ω
I_I	Input Current measuring range		0	22,7	mA
I_E	Input Error	Voltage mode		0,18	V
		Current mode		0,8	mA
BW	Input Low Pass Filter Bandwidth	-3 dB cut-off frequency	typ.41		Hz

Epec Oy reserves all rights for improvements without prior notice

Epec Oy
Tiedekatu 6
FIN-60320 Seinäjoki

Postal address
PL/P.O.Box 194
FIN-60101 Seinäjoki,
Finland

Phone
+358-(0)20-7608 111

Fax
+358-(0)20-7608 110

Internet
www.epec.fi

C_I	Input pin capacitance		typ. 47		nF
$V_{I\text{-range}}$	Input voltage range	Voltage mode (Note 1)	-0,5	33	V
		Current mode (Note 1)	-0,5	15	V

Note 1: Exceeding the max value might cause damage to input.

Functional block diagram

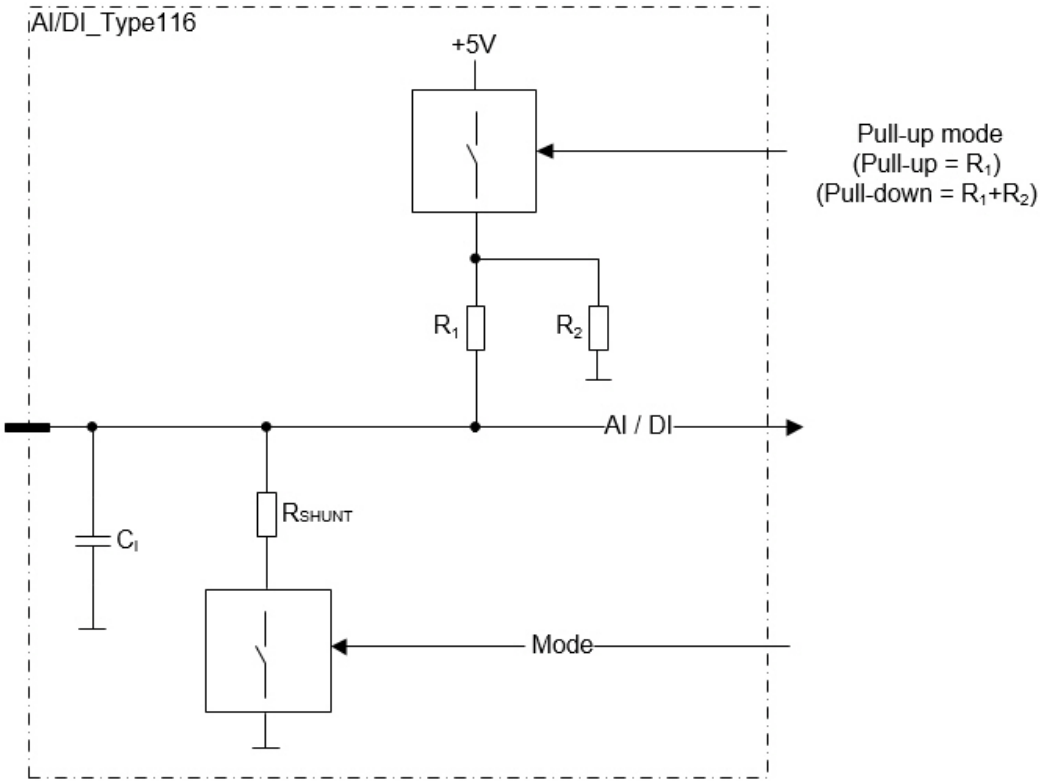

Epec Oy reserves all rights for improvements without prior notice

Epec Oy	Postal address	Phone	Fax	Internet
Tiedekatu 6	PL/P.O.Box 194	+358-(0)20-7608 111	+358-(0)20-7608 110	www.epec.fi
FIN-60320 Seinäjoki	FIN-60101 Seinäjoki, Finland			

AI/DI_Type118

- These pins are analog inputs
- These pins can be used as high impedance voltage inputs for signals from 0 to 10 volts

DI

- These pins can also be used as digital inputs by using an application library.

Electrical characteristics

Symbol	*Parameter*	*Conditions*	*Min*	*Max*	*Units*
V_I	Input Voltage measuring range		0	10	V
R_I	Input Resistance	Voltage mode (referenced to GND)	typ. 82,0		kΩ
I_E	Input Error	Voltage mode		0,18	V
BW	Input Low Pass Filter Bandwidth	-3 dB cut-off frequency	typ. 66		Hz
C_I	Input pin capacitance		typ. 1		nF
$V_{I\text{-range}}$	Input voltage range	(Note 1)	-0,5	50	V

Note 1: Exceeding the max value might cause damage to input.

Functional block diagram

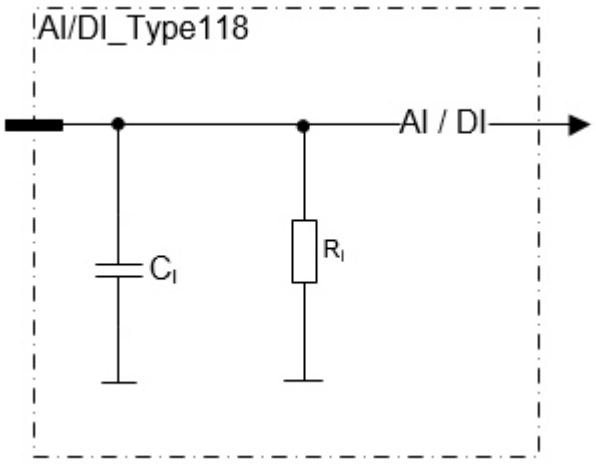

Epec Oy reserves all rights for improvements without prior notice

Epec Oy	Postal address	Phone	Fax	Internet
Tiedekatu 6	PL/P.O.Box 194	+358-(0)20-7608 111	+358-(0)20-7608 110	www.epec.fi
FIN-60320 Seinäjoki	FIN-60101 Seinäjoki, Finland			

DI/PI_Type039_3

- This type of pin is a digital input (DI) including a pulse counting (PI) feature.
- This kind of pins have a pull-down resistor to ground
- Pulse inputs can be used as a 1 or 2 channel pulse counter and they have a possibility for reset pulse. For more information, refer to Epec Programming and Libraries Manual, section *Programming 3610> I/O > Pulse Inputs.*

Electrical characteristics

Symbol	Parameter	Conditions	Min	Max	Units
R_I	Input Resistance	Referenced to GND	typ. 10		kΩ
V_{IH}	Input High Voltage	Overload conditions (Note 1)	4,1	33	V
V_{IL}	Input Low Voltage		-0,5	3,3	V
f_I	Input Frequency (frequency measurement and pulse counting)	(Note 5, 6)		20	kHz
	Input Frequency (digital inputs)	(Note 2, 4)		1/ $2t_C$	kHz
t_I	Input Pulse Width		1	10000	ms
C_I	Input Capacitance		typ. 1		nF

Note 1: Exceeding the max value might cause damage to input.
Note 2: t_C denotes the software cycle time in milliseconds.
Note 4: The pulse width must be greater that the software cycle time. For example with 50/50 pulse ratio, the pulse frequency is 1 / (2*pulse width)
Note 5: The maximum value can be reached with 50 % duty cycle.
Note 6: The maximum frequency sum for all the pins is 40 kHz.

Epec Oy reserves all rights for improvements without prior notice

Epec Oy	Postal address	Phone	Fax	Internet
Tiedekatu 6	PL/P.O.Box 194	+358-(0)20-7608 111	+358-(0)20-7608 110	www.epec.fi
FIN-60320 Seinäjoki	FIN-60101 Seinäjoki, Finland			

Functional block diagram

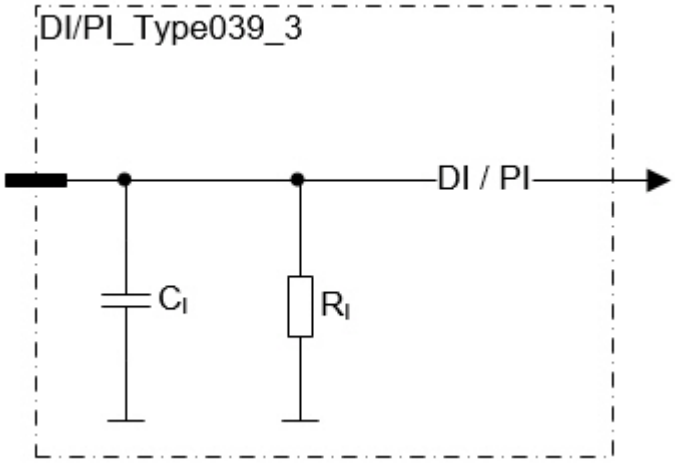

Epec Oy reserves all rights for improvements without prior notice

Epec Oy	Postal address	Phone	Fax	Internet
Tiedekatu 6	PL/P.O.Box 194	+358-(0)20-7608 111	+358-(0)20-7608 110	www.epec.fi
FIN-60320 Seinäjoki	FIN-60101 Seinäjoki, Finland			

Loader BSL Pin

Loader BSL pin's main purpose is for factory use, but it can also be used for resetting the control unit to factory settings (application and all parameters are removed, node-IDs are reset).

In case the control unit (FW version 1.170 or newer) is not responding to CAN messages, use the BSL pin to reset the control unit:

1. Disconnect the power from the control unit
2. Connect the BSL pin to ground
3. Power up the unit
4. The LED indicator flashes red and green alternatively (5 Hz frequency) for ten seconds after which it will flash only green (5 Hz)
5. Power off the unit, disconnect the BSL pin from ground and then power up the unit
6. The unit is now restored to factory settings

Epec Oy reserves all rights for improvements without prior notice

Epec Oy	Postal address	Phone	Fax	Internet
Tiedekatu 6	PL/P.O.Box 194	+358-(0)20-7608 111	+358-(0)20-7608 110	www.epec.fi
FIN-60320 Seinäjoki	FIN-60101 Seinäjoki, Finland			

+5V REF_Type041_4

- This is an internally regulated and monitored reference voltage supply for external devices.
- This reference output can be switched on/off by application.

Protection features

- Overcurrent
- External voltage protection
- Errors are indicated with a fault signal

Voltage monitoring

The level of the output voltage can be monitored by application.

Electrical characteristics

Symbol	*Parameter*	*Conditions*	*Min*	*Max*	*Units*
$V_{o\text{-}level}$	Output voltage	Output On; Unconnected pins	typ. 5		V
R_o	Output Resistance	Output On		0,46	Ω
I_o	Nominal Output Current	Output On;	0	270	mA
$I_{o\text{-}lim}$	Internal Current Limitation	Output On (Note 2, 3)	typ. 370		mA
$I_{o\text{-}sc}$	Short-circuit Current Limit	Output On; Overcurrent	typ. 270		mA
C_o	Output Capacitance		typ. 4,7		uF
$V_{I\text{-}max}$	Max Input voltage	Overload conditions (Note 1)		33	V
Voltage monitoring					
$V_{I\text{-}range}$	Nominal Voltage measuring range		0	5	V
	Fault-signal overvoltage threshold	Overvoltage	Typ. 5,2		V
	Fault-signal activation time	Overvoltage / Overload		10	ms

Note 1: When output voltage is under overload conditions, for example, short circuit to supply voltages. Exceeding the max value might cause damage to output.
Note 2: Current limit for overcurrent protection to limit internal power dissipation.
Note 3: When the limit is exceeded, the output current is regulated. In regulation, the output is switched into overcurrent mode.

Epec Oy reserves all rights for improvements without prior notice

Epec Oy	Postal address	Phone	Fax	Internet
Tiedekatu 6	PL/P.O.Box 194	+358-(0)20-7608 111	+358-(0)20-7608 110	www.epec.fi
FIN-60320 Seinäjoki	FIN-60101 Seinäjoki, Finland			

Functional block diagram

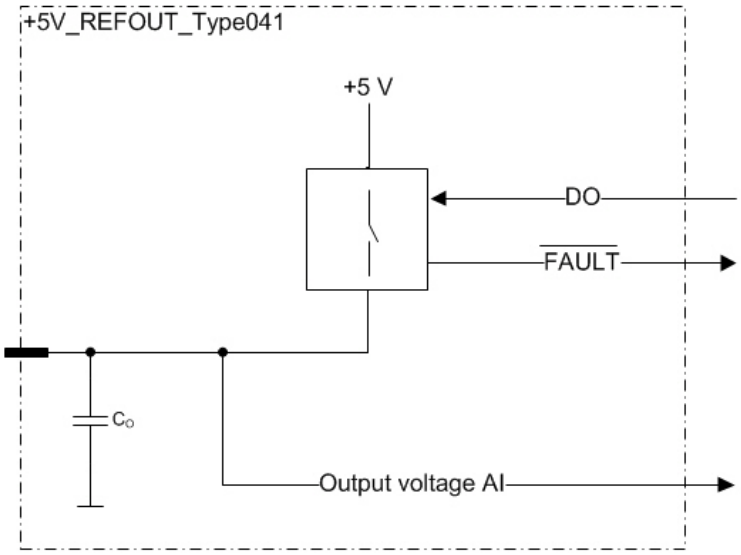

Epec Oy reserves all rights for improvements without prior notice

Epec Oy	Postal address	Phone	Fax	Internet
Tiedekatu 6	PL/P.O.Box 194	+358-(0)20-7608 111	+358-(0)20-7608 110	www.epec.fi
FIN-60320 Seinäjoki	FIN-60101 Seinäjoki, Finland			

Diagnostics

The +5V reference supply has two diagnostics checks:

- analog output voltage monitoring and
- dedicated digital fault-signal

Both can be used to indicate overload and overvoltage situations. The diagnostics are independent from each other.



For fastest and most reliable error detection, it is recommended to use both output voltage monitoring and fault-flag diagnostics to detect errors.

OVERLOAD

The diagnostics can detect overcurrent situation. The fault-signal is activated when excessive current is taken from the output. The output current is regulated when internal current limit is reached. The regulation current is always smaller than the limit. Current regulation causes the output voltage to drop with increasing load. This can be detected, using the output voltage monitoring feature, by setting a minimum (low) value limit for the output voltage.

With large enough loads, the output is switched temporarily off to protect the output from overheating. This is indicated by the fault-signal.
The fault-signal is deactivated, when the error source is removed by decreasing the load or when the output is turned off.



Overheat protection of the +5V REF can cause spurious errors in other analog measurements. Thus it is recommended to turn off the output when fault-signal becomes active.

Epec Oy reserves all rights for improvements without prior notice

Epec Oy	Postal address	Phone	Fax	Internet
Tiedekatu 6	PL/P.O.Box 194	+358-(0)20-7608 111	+358-(0)20-7608 110	www.epec.fi
FIN-60320 Seinäjoki	FIN-60101 Seinäjoki, Finland			

OVERVOLTAGE

Overvoltage event caused by an external source can be detected by using a combination of the diagnostic features. The fault-signal is activated when pin voltage goes above the fault-signal overvoltage threshold level. If the output voltage monitoring value is 5 V (or more) and the fault-signal is active, it can be determined that an external voltage source is connected to the output pin.

The output pins are protected against external voltages, but it is not recommended to connect external voltage sources to these pins.



In case of a limit violation, the output should be disabled as soon as possible. The control unit can handle short term errors, but long term (e.g. several hours) exposures should be avoided with application/system design. Long term exposure to overvoltage or overload can cause permanent damage to the unit.

Epec Oy reserves all rights for improvements without prior notice

Epec Oy	Postal address	Phone	Fax	Internet
Tiedekatu 6	PL/P.O.Box 194	+358-(0)20-7608 111	+358-(0)20-7608 110	www.epec.fi
FIN-60320 Seinäjoki	FIN-60101 Seinäjoki, Finland			

Power Supply

- Nominal supply voltage 12/24 VDC
- Operating range 8,5…33 VDC
- Undervoltage reset ≤ 8 VDC

Overvoltage Protection

- Max. 70 V (Stresses above this value may cause permanent damage to the module.)
- Control unit has a shutdown circuit which protects the unit and loads against overvoltage. The shutdown circuit cuts off the power feed for the logic and loads in case of overvoltage. The shutdown circuit is activated when voltage reaches circa 35 V. Power feed is restored when supply voltage drops to 32,5 V.

Power Consumption

- Approx. 1,3 W (+24 VDC, no external load)
- Supply Voltage (U_{in}) maximum continuous current 10 A (with full external load)
- GND current sum max 10 A

In this control unit, there is only one power supply pin (X1.24).
The ground pin (X1.1) is the recommended pin for the power supply return line. The following table shows the power supply pin locations.

Power supply pins

Designation	Connector / pin number	Potential
Supply voltage (for logic and power)	X1.24	+12/+24 VDC (+8,5…33 VDC)
Ground (for supply voltage)	X1.1	GND
I/O ground	X1.30 X1.33	GND
Supply outputs		
Reference supply (for external devices)	X1.28	+5 VDC / max 270 mA



Always use an external fuse to protect the control unit. The fuse is needed for reverse voltage and overload protection.

Epec Oy reserves all rights for improvements without prior notice

Epec Oy	Postal address	Phone	Fax	Internet
Tiedekatu 6	PL/P.O.Box 194	+358-(0)20-7608 111	+358-(0)20-7608 110	www.epec.fi
FIN-60320 Seinäjoki	FIN-60101 Seinäjoki, Finland			

Electrical characteristics

Symbol	Parameter	Conditions	Min	Max	Units
V_I	Nominal Input voltage		8,5	33	V
$I_{TOT-max}$	Max Total Current Output			10	A
$V_{I-Load-dump}$	Max Input transient Voltage level	(Note 1)		100	V
V_{I-max}	Max Continuous Input Voltage Level	(Note 2)	-0,5	40	V
V_{I-ovp}	Overvoltage Protection Cut-off Level		33	36,5	V
	Overvoltage Cut-off Hysteresis		typ. 2		V
V_{UVP}	Undervoltage Threshold Level		typ. 7,5		V
Supply voltage monitoring					
$V_{I-range}$	Nominal Input Voltage measuring range		0	46	V

Note 1: Load dump protection according to ISO7637-2: 2004 pulse 5, Us=+123V, for more information, see section *EMC Tests*
Note 2: If the voltage is less than 8,5 V or higher than 33 V, the control unit is in non-operational state.

Epec Oy reserves all rights for improvements without prior notice

Epec Oy
Tiedekatu 6
FIN-60320 Seinäjoki

Postal address
PL/P.O.Box 194
FIN-60101 Seinäjoki, Finland

Phone
+358-(0)20-7608 111

Fax
+358-(0)20-7608 110

Internet
www.epec.fi

Bus Connections

CAN Bus

CAN interface

Supported CAN amount:	2
Bit rate:	All interfaces support bit rates 50, 125, 250, 500, 800, 1000 kbit/s
CAN interface features:	• CAN1 has duplicated pins, so it can be easily used for chaining the control units. • It is possible to connect the internal termination resistor in CAN1. For more information refer to section *System Topologies*. • CODESYS 2.3 IDE communication is supported for CAN1 (PLCopen application can be downloaded via CAN1) • All interfaces can be configured as listen only mode. An exception is CAN1, which is in boot up normal mode because it is used for CODESYS communication. • Implementations of higher layer protocols are user programmable. Epec provides implementations for CANopen and SAE J1939 as PLCopen libraries. • The physical interface of CAN is according to ISO 11898 and CAN 2.0B protocol • 11-bit and 29-bit message receive and transmit are supported • Transmitting of remote frames is supported in all CAN interfaces • Receiving one remote frame is supported. This is received for the control unit's own node guard functionality.
Cabling instructions:	See section *CAN Bus Cabling*

Epec Oy reserves all rights for improvements without prior notice

Epec Oy	Postal address	Phone	Fax	Internet
Tiedekatu 6	PL/P.O.Box 194	+358-(0)20-7608 111	+358-(0)20-7608 110	www.epec.fi
FIN-60320 Seinäjoki	FIN-60101 Seinäjoki, Finland			

CAN bus connection pins

The CAN communication pins are located in the control unit's AMP35 connector as follows:

Designation	Pin number
CAN1 interface, system interface user programmable communication	X1.5 (CAN1 H) X1.6 (CAN1 H) X1.17 (CAN1 L) X1.18 (CAN1 L) X1.19 (CAN1 L terminator)
CAN2 interface, user programmable communication	X1.4 (CAN2 H) X1.16 (CAN2 L)

Epec Oy reserves all rights for improvements without prior notice

Epec Oy	Postal address	Phone	Fax	Internet
Tiedekatu 6	PL/P.O.Box 194	+358-(0)20-7608 111	+358-(0)20-7608 110	www.epec.fi
FIN-60320 Seinäjoki	FIN-60101 Seinäjoki, Finland			

Internal Diagnostics

Temperature and Voltage Monitoring

This unit's internal temperature and incoming operating voltage can be read from the PLCopen addresses with the numerical values and resolutions shown in the following table.

Type	PLCopen address	Precision	Resolution bits	Full reading
Internal Diagnostics				
AI(T_{PCB})	%IW28	≤ ±3,5 %	10	
AI(U_{R2V5})*	%IW27	≤ ±3,5 %	10	5 V
AI(U_{R4V3})*	%IW32	≤ ±3,5 %	10	5 V
AI(U_{R8})*	%IW26	≤ ±3,5 %	10	9,15 V
External Diagnostics				
AI(U_{in})	%IW29	≤ ±3,5 %	10	46 V
AI(+5 V REF)	%IW25	≤ ±3,5 %	10	5 V

** Internal voltage measurement is used for internal voltage level monitoring. MultiTool adds these automatically to code template.*

Temperature

This control unit has one temperature sensor for monitoring PCB area temperature. The temperature information is useful for self diagnostic purposes and safety features.

Symbol	*Parameter*	*Conditions*	*Min*	*Max*	*Units*
T_{PCB}	Nominal PCB Temperature measuring range		-40	125	°C
$T_{PCB-err}$	Temperature Measurement Error	-40 .. +100 °C		+/- 6	% (FS)
		-55 .. +125 °C		+/- 9	% (FS)

Epec Oy reserves all rights for improvements without prior notice

Epec Oy
Tiedekatu 6
FIN-60320 Seinäjoki

Postal address
PL/P.O.Box 194
FIN-60101 Seinäjoki, Finland

Phone
+358-(0)20-7608 111

Fax
+358-(0)20-7608 110

Internet
www.epec.fi

LED Indicator

The LED indicator light is situated on the top side of the control unit according to the following figure:

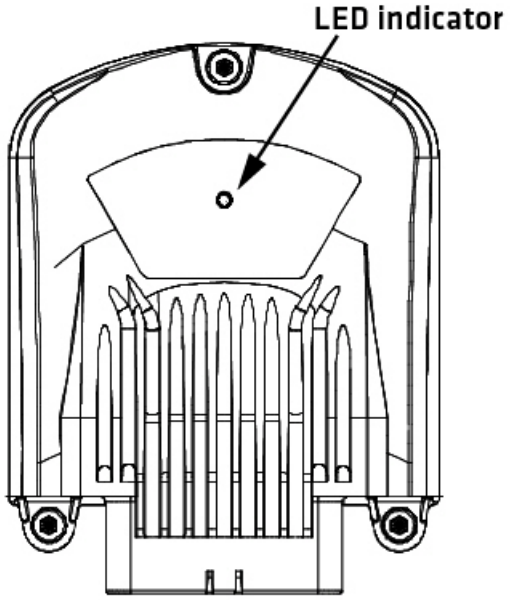

Some of the states must be implemented by using EXT programming library. For more information about EXT programming library, refer to *Epec programming and libraries manual*.

The LED has green and red indicators and they indicate different operating conditions according to the following table:

LED State	Green LED	Red LED	Implemented in device firmware	Implement by using EXT programming library	Explanation
Off	-	-	X		No supply voltage or an application stop state after a watchdog reset.
Default Application or No User Application	Blinks 5 times/second	-	X		Firmware is running, no PLCopen application or application

Epec Oy reserves all rights for improvements without prior notice

Epec Oy
Tiedekatu 6
FIN-60320 Seinäjoki

Postal address
PL/P.O.Box 194
FIN-60101 Seinäjoki, Finland

Phone
+358-(0)20-7608 111

Fax
+358-(0)20-7608 110

Internet
www.epec.fi

					download in progress
ApplicationOk	Blinks 2 times/ second	-	X		Application is running and the system is OK
Application Stopped or initializing	LED is constantly on	-	X	X	Stopped / Starting / Initializing **Firmware:** LED is continuously on while application is stopped. **EXT Library:** LED is continuously on also during the initialization: starting from power on until the application is running and the I/O / CAN initializations are done.
FatalError	-	LED is constantly on	X		Control unit boot-up failed or a critical firmware error while running.
ApplicationError	-	Blinks 2 times/ second		X	External PLCopen library controls, for example when output controlling is disabled, so called safe state.

Epec Oy reserves all rights for improvements without prior notice

Epec Oy
Tiedekatu 6
FIN-60320 Seinäjoki

Postal address
PL/P.O.Box 194
FIN-60101 Seinäjoki, Finland

Phone
+358-(0)20-7608 111

Fax
+358-(0)20-7608 110

Internet
www.epec.fi

IOError	-	Blinks 5 times/second		X	External PLCopen library controls, for example when system is OK but there is short circuit in one of the outputs or other similar error is active (depends of application)
Update	Blinks alternately with red LED	Blinks alternately with green LED	X		Red and green LEDs are flashed alternately after firmware update boot-up, during the installation phase or when restoring factory settings with BSL pin.

Epec Oy reserves all rights for improvements without prior notice

Epec Oy	Postal address	Phone	Fax	Internet
Tiedekatu 6	PL/P.O.Box 194	+358-(0)20-7608 111	+358-(0)20-7608 110	www.epec.fi
FIN-60320 Seinäjoki	FIN-60101 Seinäjoki, Finland			

Error Log

The control unit's internal error log stores the firmware errors in a log.

For more information about the logs and how to read them, refer to *Epec Programming and Libraries Manual MAN000538*.

Epec Oy reserves all rights for improvements without prior notice

Epec Oy	Postal address	Phone	Fax	Internet
Tiedekatu 6	PL/P.O.Box 194	+358-(0)20-7608 111	+358-(0)20-7608 110	www.epec.fi
FIN-60320 Seinäjoki	FIN-60101 Seinäjoki, Finland			

Approvals and Safety

EMC Tests

Epec 3610 control units are certified according to EMC tests that are described in this section.

The following tables provide a summary of performed EMC tests:

Emission tests according to the test specification EN 61000-6-3 (2007), Amd. A1 (2011)

Emission test	Test method
Radiated disturbance	EN 55016-2-3
Conducted disturbance at the mains ports	EN 55016-2-1

Immunity tests according to the test specification EN 61000-6-2 (2005)

Immunity test	Test method
Electrostatic discharge (ESD)	EN 61000-4-2
Radiated radio-frequency electromagnetic field	EN 61000-4-3
Electrical fast transients (EFT/B)	EN 61000-4-4
Surges	EN 61000-4-5
Conducted radio-frequency field immunity	EN 61000-4-6

Emission tests according to the E/ECE Regulation No. 10, Revision 4

Emission test	Test method
Measurement of radiated interference field strength in the frequency range 30 – 1000 MHz	E/ECE Reg. No. 10, Annexes 7 and 8
Measurement of conducted disturbances	E/ECE Reg. No. 10, Annex 10

Immunity tests according to the E/ECE Regulation No. 10, Revision 4

Immunity test	Test method
Radiated radio-frequency electromagnetic field	E/ECE Reg. No. 10, Annex 9
Immunity to transient disturbances conducted along supply lines	E/ECE Reg. No. 10, Annex 10

Epec Oy reserves all rights for improvements without prior notice

Epec Oy
Tiedekatu 6
FIN-60320 Seinäjoki

Postal address
PL/P.O.Box 194
FIN-60101 Seinäjoki, Finland

Phone
+358-(0)20-7608 111

Fax
+358-(0)20-7608 110

Internet
www.epec.fi

The following tables provide more detailed descriptions about the performed EMC tests:

<table>
<tr><th colspan="2">Emission tests according to the E/ECE Regulation No. 10, Revision 4</th></tr>
<tr><td>Radiated disturbance emission test</td><td>• Test method E/ECE Reg. No. 10, Annexes 7 and 8, CISPR 25

<table><tr><th>Frequency (MHz)</th><th>Limit value (dBmV/m)</th></tr><tr><td>30 – 1000</td><td>62/52/63
(Broadband QP)</td></tr><tr><td>30 – 1000</td><td>52/42/53
(Narrowband AVE)</td></tr></table></td></tr>
<tr><td>Conducted disturbances emission test</td><td>• Test method E/ECE Reg. No. 10, Annex 10, ISO 7637-2: 2004/Amd.1:2008

<table><tr><th>Port</th><th>Limit level (V)</th></tr><tr><td rowspan="2">12 V DC input</td><td>+75</td></tr><tr><td>-100</td></tr><tr><td rowspan="2">24 V DC input</td><td>+150</td></tr><tr><td>- 450</td></tr></table></td></tr>
</table>

Epec Oy reserves all rights for improvements without prior notice

Epec Oy	Postal address	Phone	Fax	Internet
Tiedekatu 6	PL/P.O.Box 194	+358-(0)20-7608 111	+358-(0)20-7608 110	www.epec.fi
FIN-60320 Seinäjoki	FIN-60101 Seinäjoki, Finland			

Immunity tests according to the E/ECE Regulation No. 10, Revision 4 (2012)	
Immunity to transient disturbances conducted along supply lines test	• Test method E/ECE Reg. No. 10, Annex 10, ISO 7637-2: 2004/Amd.1:2008 • Performance criterion:

Pulse	Criterion
1	C
2a	A
2b	C
3a	A
3b	A
4	C (12 V) A (24 V)
5a	C

- 12 V input, Pulse:

Pulse	Pulse parameters
1	-150 V, R_i 10 Ω, 3 s, 5000 pulses
2a	+112 V, R_i 2 Ω, 200 ms, 5000 pulses
2b	+10 V, 500 ms, 10 pulses
3a	-220 V, 10/90 ms, 60min
3b	+150 V, 10/90 ms, 60min
4	t_d 40 ms -7,0 V, 20 s -6 V, 10 pulses
5a	t_d 400ms, R_i 0,5 Ω, +70 V, 1 pulses t_d 100ms, R_i 10 Ω, +123 V, 1 pulses

- 24 V input, Pulse:

Pulse	Pulse parameters
1	-600 V, R_i 50 Ω, 3 s, 5000 pulses
2a	+112 V, R_i 2 Ω, 200 ms, 5000 pulses
2b	+20 V, 500 ms, 10 pulses
3a	-300 V, 10/90 ms, 60min
3b	+300 V, 10/90 ms, 60min
4	t_d 100 ms -12 V, 10 s -5 V, 1 pulses
5a	t_d 350ms, R_i 1 Ω, +70 V, 1 pulses t_d 100ms, R_i 10 Ω, +123 V, 1 pulses

Epec Oy reserves all rights for improvements without prior notice

Epec Oy
Tiedekatu 6
FIN-60320 Seinäjoki

Postal address
PL/P.O.Box 194
FIN-60101 Seinäjoki, Finland

Phone
+358-(0)20-7608 111

Fax
+358-(0)20-7608 110

Internet
www.epec.fi

Immunity of ESAs to electromagnetic radiation

- Test method E/ECE Reg. No. 10, Annex 9, ISO 11452-2:2004, ISO 11452-4:2005, Cor 1: 2009
- Performance criterion: A

Specification	Step	Dwell time	Frequency Range (MHz)	Test level
Modulation AM80% 1 kHz	5%	3 s	20-80	60 mA
Modulation AM80% 1 kHz	2%	3 s	80-800	30 V/m
PM 577/4600 µs	1%	3 s	800-2000	30 V/m (constant peak)

Classification of functional status

Class A:
All functions of a device/system perform as designed during and after exposure to disturbance.

Class B:
All functions of a device/system perform as designed during and after exposure to disturbance. However, one or more of them can go beyond specified tolerance. All functions return automatically to within normal limits after exposure is removed. Memory functions shall remain class A.

Class C:
One or more functions of a device/system do not perform as designed during exposure but return automatically to normal operation after exposure is removed.

Class D:
One or more functions of a device/system do not perform as designed during exposure and do not return to normal operation until exposure is removed and a device/system is reset by simple “operator/use” action.

Class E:
One or more functions of a device/system do not perform as designed during exposure and cannot be returned to operation without repairing the device/system.

Epec Oy reserves all rights for improvements without prior notice

Epec Oy	Postal address	Phone	Fax	Internet
Tiedekatu 6	PL/P.O.Box 194	+358-(0)20-7608 111	+358-(0)20-7608 110	www.epec.fi
FIN-60320 Seinäjoki	FIN-60101 Seinäjoki, Finland			

<table>
<tr><td colspan="2">EN 61000-6-3 (2007), Amd. A1 (2011)
Electromagnetic compatibility-generic emission standard
part6-3: residential, commercial and light industry</td></tr>
<tr><td>Radiated disturbance emission test</td><td>• Test method EN 55016-2-3
<table><tr><th>Frequency (MHz)</th><th>Limit value (dBmV/m)</th></tr><tr><td>30 – 1000</td><td>30/37 (QP)</td></tr></table></td></tr>
<tr><td>Conducted disturbance at main ports emission test</td><td>• Test method EN 55016-2-1
<table><tr><th>Frequency (MHz)</th><th>Limit value (dBmV)</th></tr><tr><td>0,15 - 30</td><td>66/56/60 (QP)</td></tr><tr><td>0,15 - 30</td><td>56/46/50 (AVE)</td></tr></table></td></tr>
<tr><td colspan="2">EN 61000-6-2 (2005)
Electromagnetic compatibility-generic immunity standard
part6-2: industrial environment</td></tr>
<tr><td>Conducted radio-frequency common mode immunity test</td><td>• Test method EN 61000-4-6
• Performance criterion A
<table><tr><th>Specification</th><th>Port</th><th>Test level</th></tr><tr><td rowspan="2">Frequency range 0,150-80 MHz, Modulation AM80% 1 kHz, Dwell time 3 s</td><td>DC input port</td><td>10 V_{RMS}</td></tr><tr><td>Signal ports</td><td>10 V_{RMS}</td></tr></table></td></tr>
<tr><td>Radiated radio-frequency electromagnetic field immunity test</td><td>• Test method EN 61000-4-3
• Performance criterion A
<table><tr><th>Specification</th><th>Range (MHz)</th><th>Test level</th></tr><tr><td rowspan="2">Modulation AM 80% 1 kHz, Dwell time 1 s</td><td>80-1000</td><td>10 V/m</td></tr><tr><td>1400-2700</td><td>3 V/m</td></tr></table></td></tr>
</table>

Epec Oy reserves all rights for improvements without prior notice

Epec Oy
Tiedekatu 6
FIN-60320 Seinäjoki

Postal address
PL/P.O.Box 194
FIN-60101 Seinäjoki, Finland

Phone
+358-(0)20-7608 111

Fax
+358-(0)20-7608 110

Internet
www.epec.fi

<table>
<tr><td>Electrical fast transient (EFT/B) immunity test</td><td>
Test method EN 61000-4-4
Performance criterion B
<table>
<tr><th>Test pulse</th><th>Port</th><th>Test level</th></tr>
<tr><td rowspan="2">Repetition frequency 5 kHz, Duration 1 minute</td><td>DC input port</td><td>± 2,0 kV</td></tr>
<tr><td>Signal ports</td><td>± 1,0 kV</td></tr>
</table>
</td></tr>
<tr><td>Surge Immunity</td><td>
Test method EN 61000-4-5
Performance criterion B
<table>
<tr><th>Specification</th><th>Port</th><th>Path</th><th>Test level</th></tr>
<tr><td rowspan="2">Pulses: 5
Repetition rate: 60 s</td><td rowspan="2">DC Input port</td><td>Line to Line</td><td>± 0,5 kV</td></tr>
<tr><td>Line to Ground</td><td>± 0,5 kV
± 1,0 kV</td></tr>
</table>
</td></tr>
<tr><td>Electrostatic discharge (ESD) immunity test</td><td>
Test method EN61000-4-2
Performance criterion B
<table>
<tr><th>Discharge mode</th><th>Test level (kVp)</th></tr>
<tr><td>Contact</td><td>± 2, ± 4, ± 6, ± 8</td></tr>
<tr><td>Indirect contact</td><td>± 2, ± 4, ± 8</td></tr>
<tr><td>Air</td><td>± 2, ± 4, ± 8, ± 15</td></tr>
</table>
</td></tr>
<tr><td colspan="2">Performance criteria for immunity tests

Performance criterion A:
The EUT shall continue to operate as intended during and after the test. No degradation of performance is allowed.

Performance criterion B:
The EUT shall continue to operate as intended after the test. However, moderate degradation of performance is allowed. No change of actual operating state or loss of memory functions is allowed.</td></tr>
</table>

Epec Oy reserves all rights for improvements without prior notice

Epec Oy	Postal address	Phone	Fax	Internet
Tiedekatu 6	PL/P.O.Box 194	+358-(0)20-7608 111	+358-(0)20-7608 110	www.epec.fi
FIN-60320 Seinäjoki	FIN-60101 Seinäjoki, Finland			

Mechanics and Cabling

Unit Dimensions

Unit dimensions from the top:

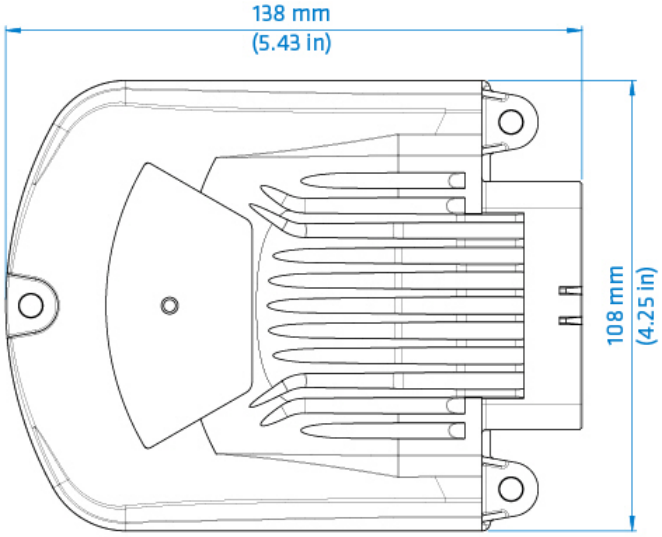

Unit dimensions from the side:

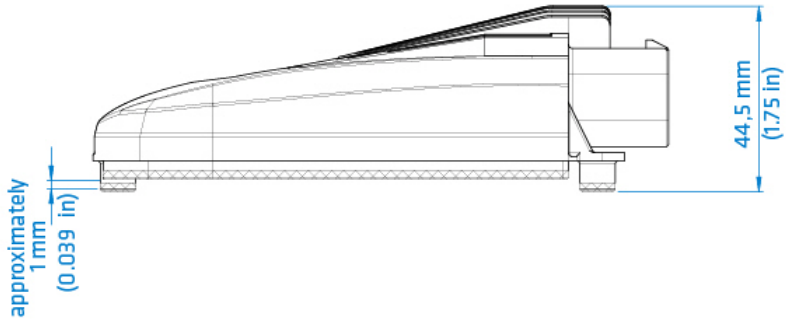

Epec Oy reserves all rights for improvements without prior notice

Epec Oy	Postal address	Phone	Fax	Internet
Tiedekatu 6	PL/P.O.Box 194	+358-(0)20-7608 111	+358-(0)20-7608 110	www.epec.fi
FIN-60320 Seinäjoki	FIN-60101 Seinäjoki, Finland			

Fastening hole dimension:

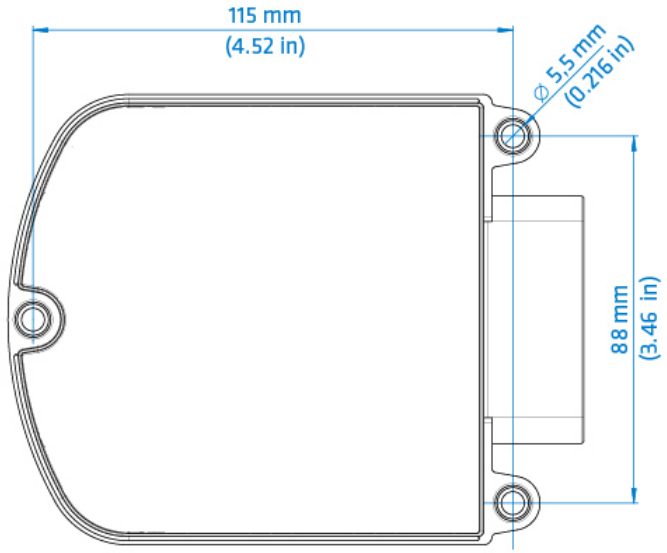

Mounting and Cleaning

Control unit mounting location should be planned so that the machine's washing does not damage the unit.

A direct water jet towards the control units should be avoided, especially when using high pressure. Also, the use of any such solvent that causes damage to electronic devices should be avoided when handling the control units.

When cleaning the control unit, do not use highly alkaline / acidic substances, too hot water, or too heavy mechanical abrasion.

In moist conditions, the unit must be mounted and oriented so that the connectors are not filled with water.

If the product's assembly screws or product labels have been removed or damaged or the unit housing has been opened in any way, the warranty becomes null and void.

- The mounting is done with 3 pieces of M5 screws
- It is possible to use a spring washer under the screw head

Epec Oy reserves all rights for improvements without prior notice

Epec Oy	Postal address	Phone	Fax	Internet
Tiedekatu 6	PL/P.O.Box 194	+358-(0)20-7608 111	+358-(0)20-7608 110	www.epec.fi
FIN-60320 Seinäjoki	FIN-60101 Seinäjoki, Finland			

- Mounting must be done on to a conductive metal base. The control unit's zinc housing must have a galvanic connection to the machine frame
- The paint must be removed from the control unit under each screw head before mounting, to ensure a galvanic connection to the control unit frame. Also, remove the paint from the machine frame, where the control unit will be attached.
- 3-point mounting allows mounting on a slightly uneven surface
- Reserve 10 cm installation space for the connector cables
- Mounting position must be horizontal or vertical to allow water, etc. flowing away from connectors, see the figures below.

Do not mount the unit in a position where the bottom side or the connectors are facing up.

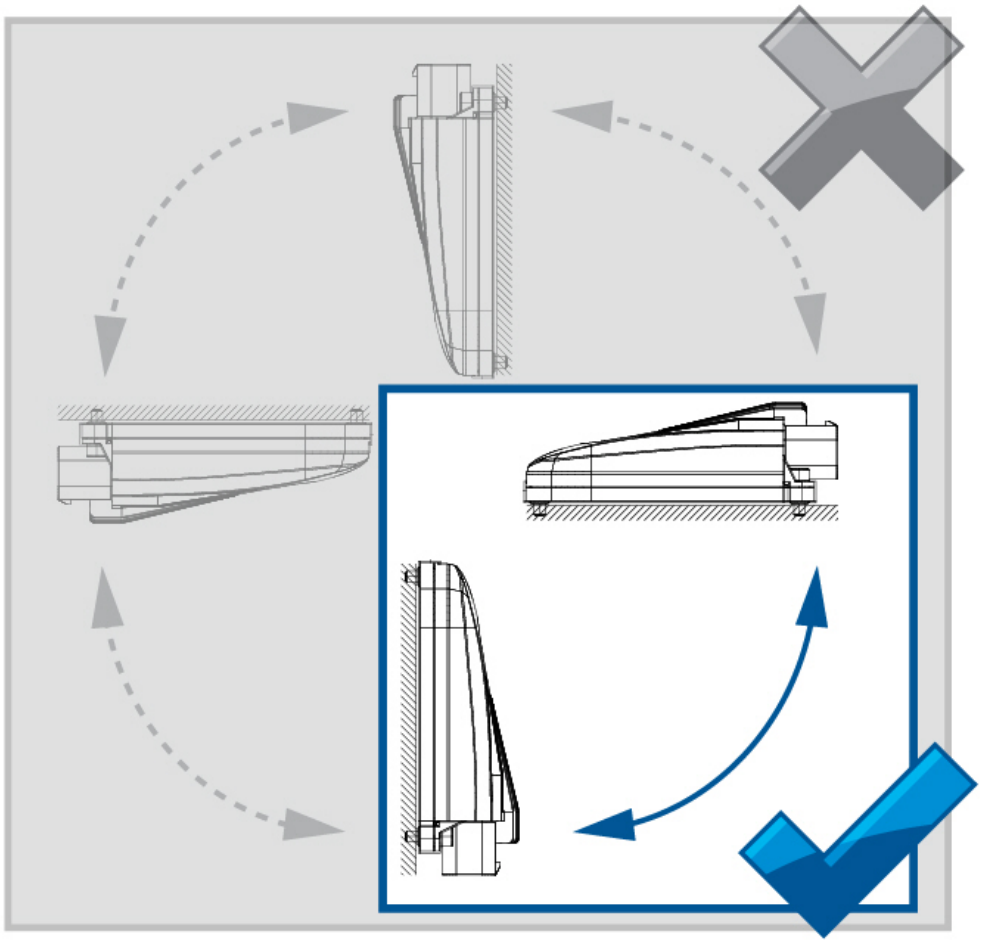

Do not mount the unit in a position where the connector side is facing up.

Epec Oy reserves all rights for improvements without prior notice

Epec Oy	Postal address	Phone	Fax	Internet
Tiedekatu 6	PL/P.O.Box 194	+358-(0)20-7608 111	+358-(0)20-7608 110	www.epec.fi
FIN-60320 Seinäjoki	FIN-60101 Seinäjoki, Finland			

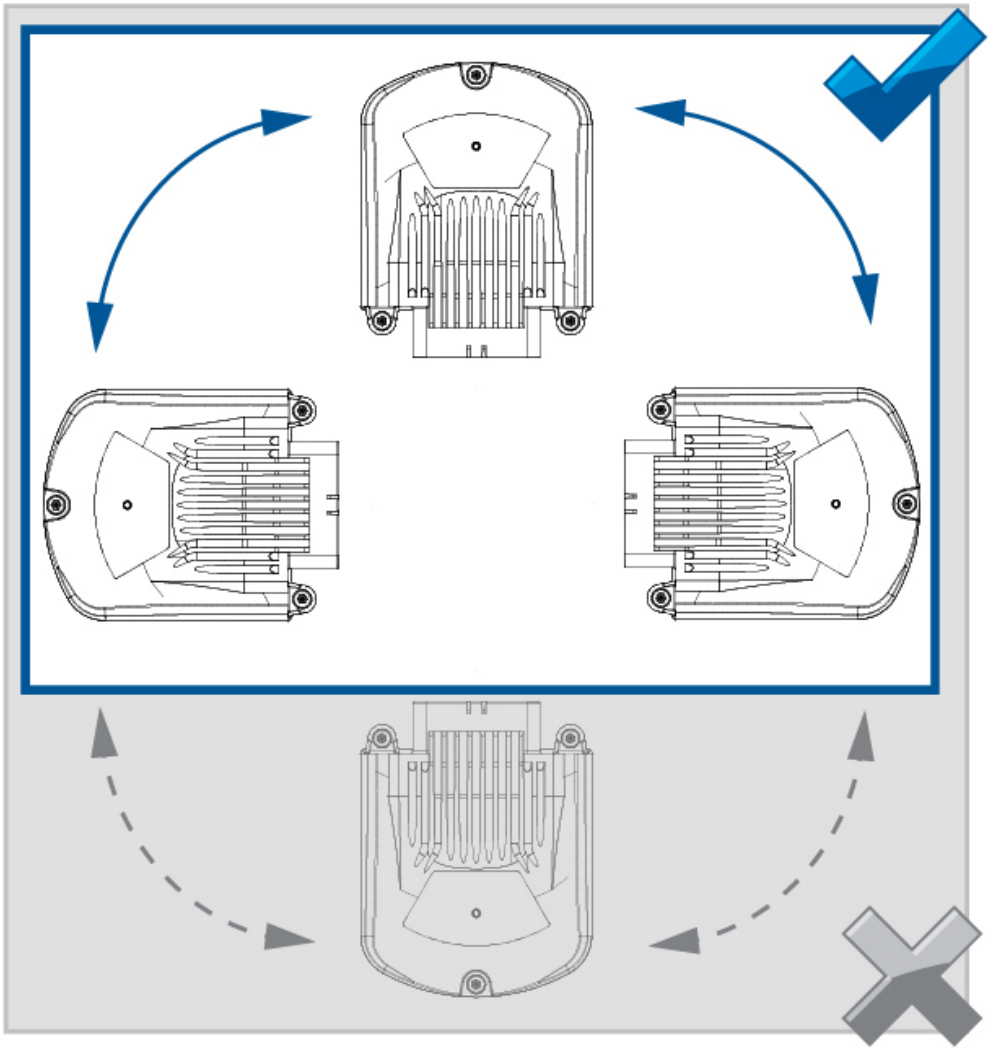

Epec Oy reserves all rights for improvements without prior notice

Epec Oy	Postal address	Phone	Fax	Internet
Tiedekatu 6	PL/P.O.Box 194	+358-(0)20-7608 111	+358-(0)20-7608 110	www.epec.fi
FIN-60320 Seinäjoki	FIN-60101 Seinäjoki, Finland			

Plugging and unplugging the cables/connectors

Epec control units use heavy duty gold plated, locked and sealed AMPSEAL connectors. The following figure shows an example of an AMPSEAL connector:

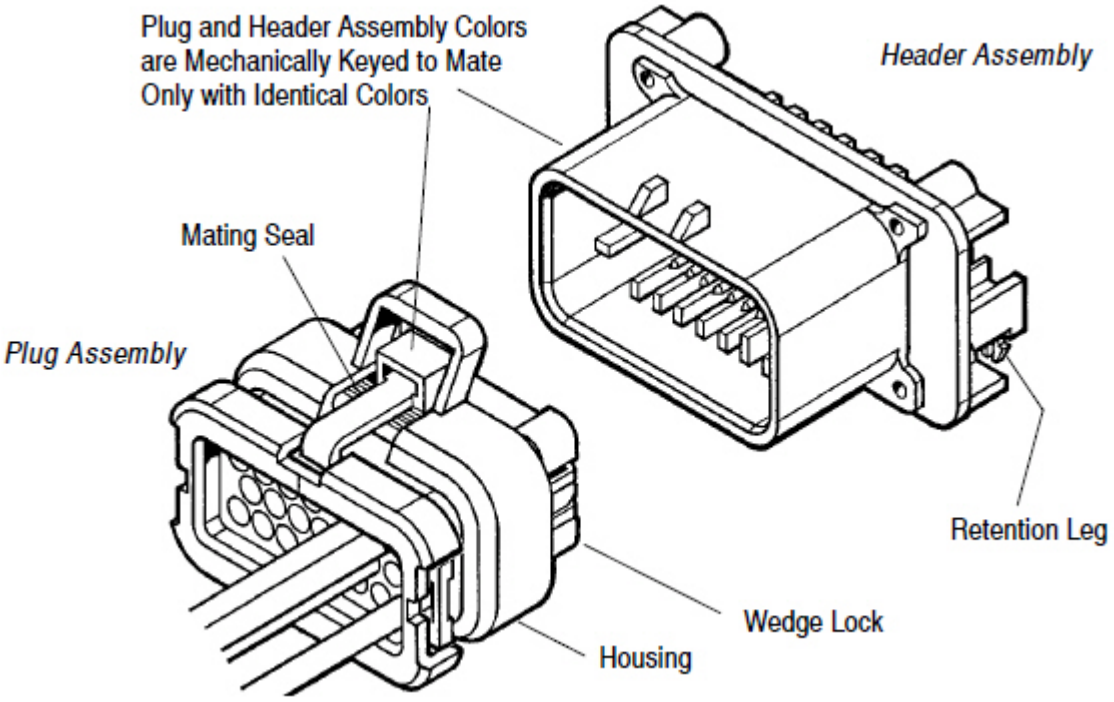

- Gold plated AMPSEAL connectors pack a current of 15 amperes per contact and tolerate operating temperature range.
- All module connectors are mechanically keyed to mate only with identical colors (blue, grey and black).

When connecting, make sure that:

- connectors are pressed down to the bottom and that they are locked
- connectors are clean (avoid moisture or dirt inside the connector)
- unused connectors are covered with empty connectors of the same color (this helps to keep the control unit connectors dry and protected)
- all cables, connectors and tools are of correct type, and sufficiently high quality, and suitable for this kind of use (protection for moisture, mechanical stability, power durability, coupling resistance among other things)
- there is a sufficient margin (slack) left in the cables to prevent the torsion of the connectors
- wires are bound to the control unit cover base knob with cable ties

Epec Oy reserves all rights for improvements without prior notice

Epec Oy	Postal address	Phone	Fax	Internet
Tiedekatu 6	PL/P.O.Box 194	+358-(0)20-7608 111	+358-(0)20-7608 110	www.epec.fi
FIN-60320 Seinäjoki	FIN-60101 Seinäjoki, Finland			

The following figure describes some general instructions about the connectors.

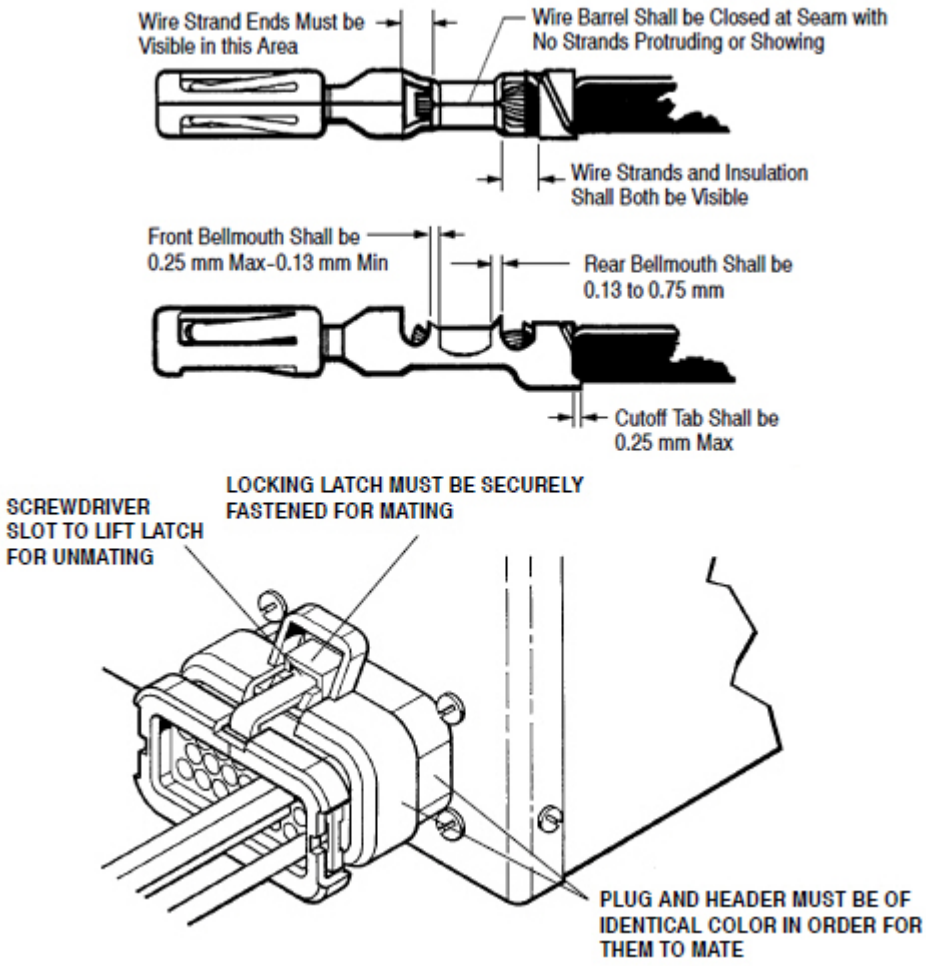

Refer to AMP Application Specification 114-16016 for more detailed information on connectors and cable recommendations.

Ordering codes for the AMPSEAL connectors, crimps and tools are listed in Section *Accessories and Ordering Codes*.

Epec Oy reserves all rights for improvements without prior notice

Epec Oy	Postal address	Phone	Fax	Internet
Tiedekatu 6	PL/P.O.Box 194	+358-(0)20-7608 111	+358-(0)20-7608 110	www.epec.fi
FIN-60320 Seinäjoki	FIN-60101 Seinäjoki, Finland			

Cabling

System Topologies

Generally, cabling should be properly designed and documented to help the initial assembly and maintenance.
It is highly recommended to mark each cable on both ends to avoid confusion and errors.

The cables must be run in a safe route along the machine frame.
When routing cables, avoid interfering objects and pay particular attention to moving parts of the machine.
It is also good to minimize the amount of the connection points of the cable harness to maximize reliability.
Also, all valid safety instructions should be observed when coupling.

- The control units are connected with each other using standardized CAN bus.
- The idea of the Epec embedded control system, is that all the control units are installed close to sensors, encoders and other equipment connected to them.
    - This way the amount of the traffic on the CAN bus is minimized and connections can be made using short wires.

Termination resistors

- Generally, the bus cable is terminated at both ends with termination resistors (ISO 11898:1993).
        - In CAN1, termination resistor can be connected internally as shown in the figure Example1 below
    -

The cable lengths presented here are approximates. Actual cable lengths also depend on the cable quality, the cable type and also on the machine environment (possible interference).

Epec Oy reserves all rights for improvements without prior notice

Epec Oy	Postal address	Phone	Fax	Internet
Tiedekatu 6	PL/P.O.Box 194	+358-(0)20-7608 111	+358-(0)20-7608 110	www.epec.fi
FIN-60320 Seinäjoki	FIN-60101 Seinäjoki, Finland			

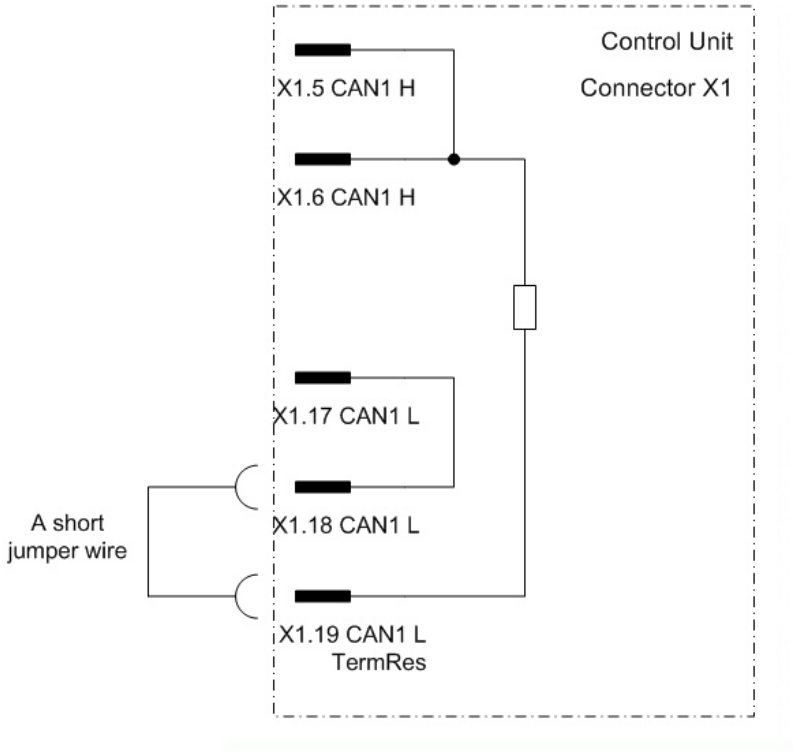

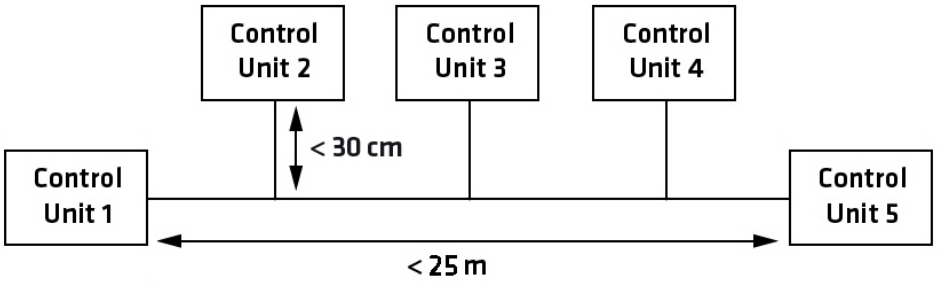

Example 2. Control system topology in theory with maximum bus speed (1000 kbit/s); Control Units in traditional bus arrangement. Termination resistor must be connected at control unit 1 and control unit 5. For more information about the bus speeds, refer to CiA DS-102 standard.

Epec Oy reserves all rights for improvements without prior notice

Epec Oy	Postal address	Phone	Fax	Internet
Tiedekatu 6	PL/P.O.Box 194	+358-(0)20-7608 111	+358-(0)20-7608 110	www.epec.fi
FIN-60320 Seinäjoki	FIN-60101 Seinäjoki, Finland			

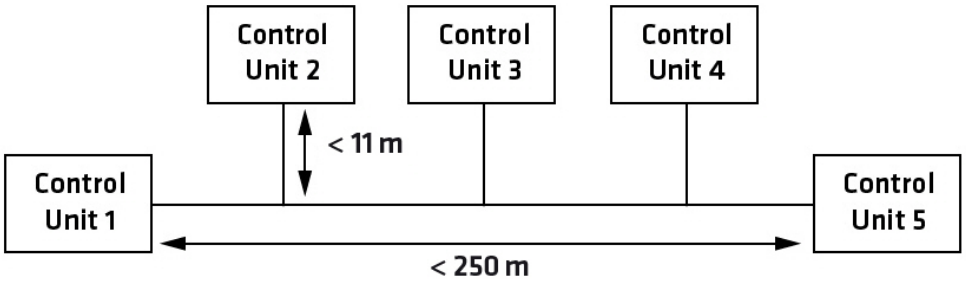

Example 3. Control system topology in theory with 250 kbit/s bus speed; Control Units in traditional bus arrangement. Termination resistor must be connected at control unit 1 and control unit 5. For more information about the bus speeds, refer to CiA DS-102 standard.

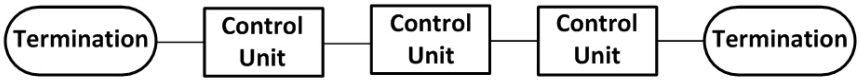

Example 4. The usage of the termination resistor (TR) in a conventional bus. The maximum recommended bus length is directly dependent on the bus speed.
In theory, the maximum length with the maximum speed can be up to 25 meters. If the bus speed is lower, the length can be extended.
The maximum length of the bus depends on the bus speed. For more information about the bus speeds, see the table below / refer to CiA DS-102 standard.

The following table shows some baud rates in general purpose CAN bus networks as well as the maximum bus length for a given baud rate, that CAN in Automation (CiA) international users and manufacturers group has recommended to be used. For more information, refer to CiA DS-102 standard.

CAN bus baud rates and bus lengths according to CiA DS-102 standard

Baudrate	Bus length
1 Mbits/s	25 m
800 kbits/s	50 m
500 kbits/s	100 m
250 kbits/s	250 m
125 kbits/s	500 m
50 kbits/s	1000 m

Epec Oy reserves all rights for improvements without prior notice

Epec Oy
Tiedekatu 6
FIN-60320 Seinäjoki

Postal address
PL/P.O.Box 194
FIN-60101 Seinäjoki, Finland

Phone
+358-(0)20-7608 111

Fax
+358-(0)20-7608 110

Internet
www.epec.fi

CAN Bus Cabling



The CAN bus cable is the neural backbone of the whole system and should be designed and constructed with extra care.

- The control unit's CAN1 is equipped with double pins that enables cabling without branching the wire harness
- For information about the CAN bus lengths and baud rates, refer to section *System Topologies*.

Cable

- It is recommended to use high quality and twisted (approx. 1 round / 1 inch) CAN bus cable.
- Normal UTP (Unshielded Twisted Pairs) cable is well suited for distances under approximately 10 meters.
- In longer distances, and especially if there is possibility for electromagnetic interference, it is highly recommended to use shielded and twisted cable for CAN bus, also for shorter distances.
- To avoid electromagnetic interference (EMI), locate the bus cable as far away from high-current carrying cables as possible. Generally, the amount of the connections and connectors should be minimized to maximize security; also all connections should be done carefully.
- The shield grounding must be done only in one end of the cable

Epec Oy reserves all rights for improvements without prior notice

Epec Oy	Postal address	Phone	Fax	Internet
Tiedekatu 6	PL/P.O.Box 194	+358-(0)20-7608 111	+358-(0)20-7608 110	www.epec.fi
FIN-60320 Seinäjoki	FIN-60101 Seinäjoki, Finland			

Cable shield

Connection example when there is a GND pin available in the control unit:

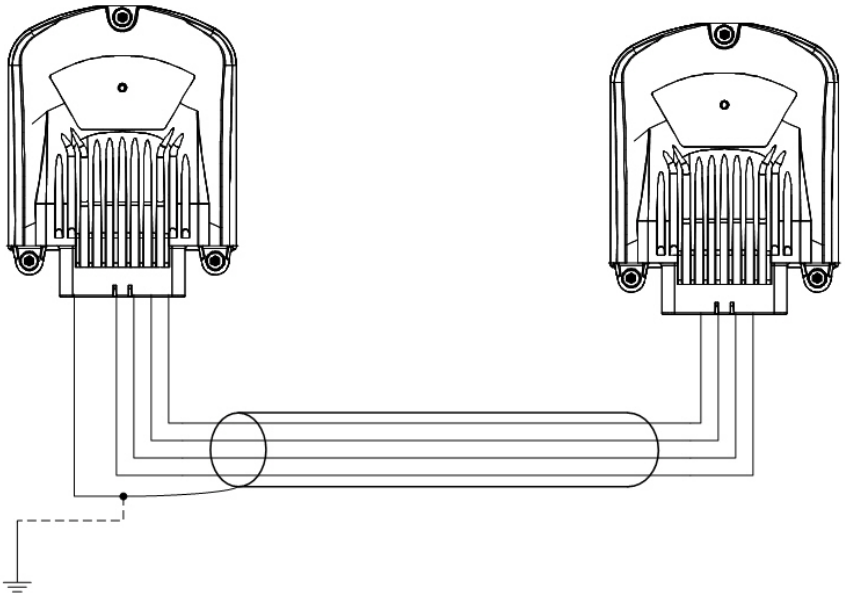

Connection example when there is not a GND pin available in the control unit:

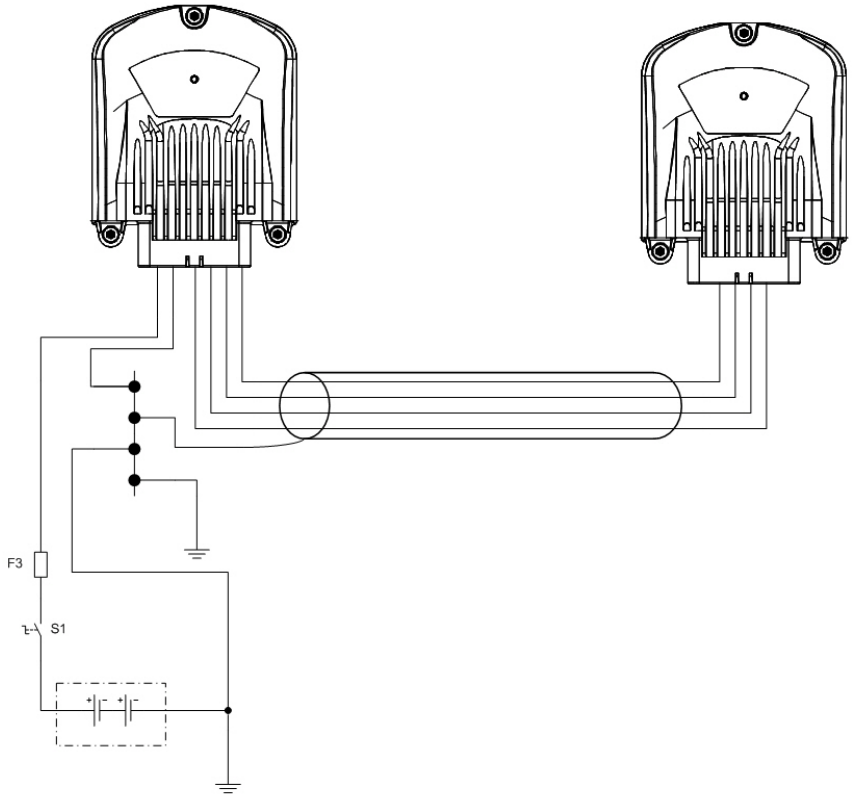

CAN cabling for system developers

Epec Oy reserves all rights for improvements without prior notice

Epec Oy	Postal address	Phone	Fax	Internet
Tiedekatu 6	PL/P.O.Box 194	+358-(0)20-7608 111	+358-(0)20-7608 110	www.epec.fi
FIN-60320 Seinäjoki	FIN-60101 Seinäjoki, Finland			

The following figure describes cabling for CAN communication between Epec control units and a PC.
Ordering codes for the needed hardware are included in the figure.

Epec control units with AMP35 connector, example 1:

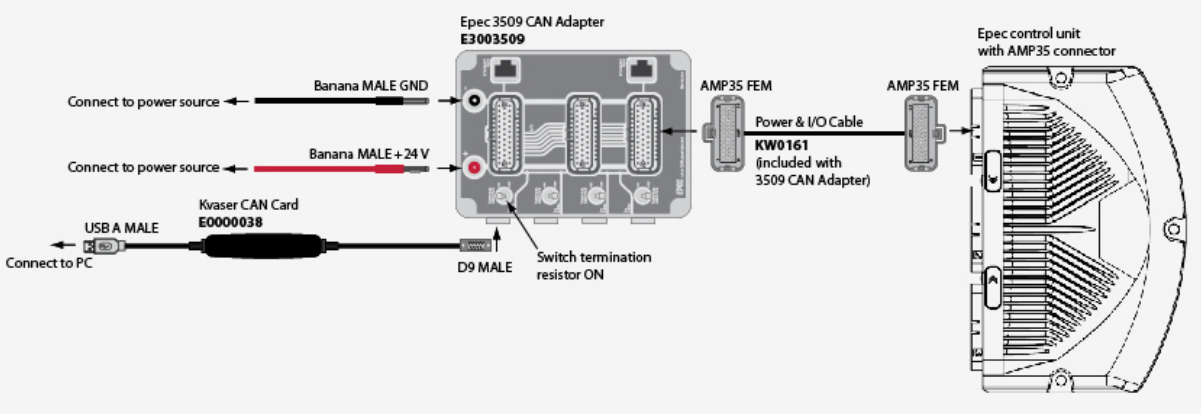

Epec control units with AMP35 connector, example 2:

An external termination resistor (120 Ω) has to be connected at both ends between CAN H and CAN L.

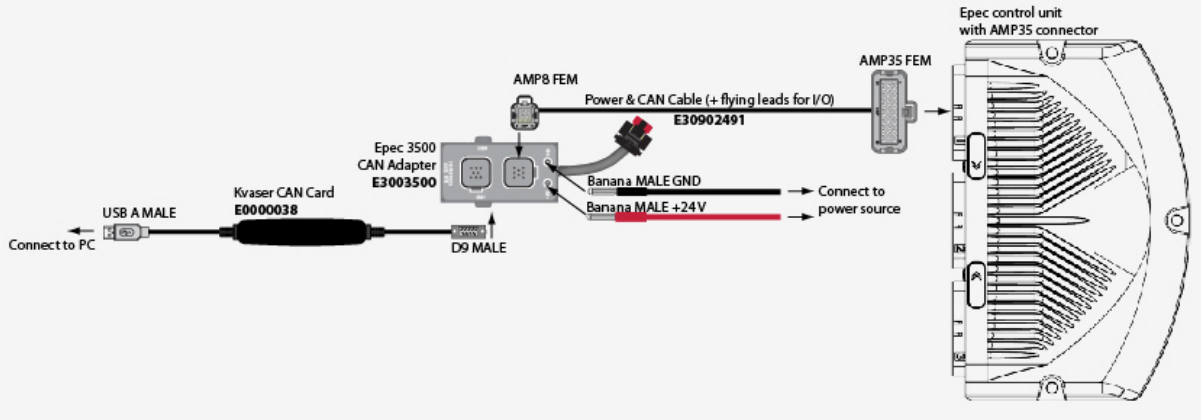

Epec Oy reserves all rights for improvements without prior notice

Epec Oy	Postal address	Phone	Fax	Internet
Tiedekatu 6	PL/P.O.Box 194	+358-(0)20-7608 111	+358-(0)20-7608 110	www.epec.fi
FIN-60320 Seinäjoki	FIN-60101 Seinäjoki, Finland			

I/O Cabling



Closed circuit loops are always recommended and mandatory when you are using DO or PWM pin as an input.
Closed circuit loop means that the current from the control unit to the sensor must return to the same control unit, see the figures below.



To ensure correct measurement, reserve separate GND pin(s) for AI pin(s) and don't use it/them for any other purposes. See cabling example below.

- The cabling for encoders etc. is in many cases supplied together with them.
- In many cases, very simple basic cable may be used, e.g. automobile R2 cable (0,5 or 1,0) by NK Cables.
- Dimensions of the cable should be appropriate for AMP contacts (so that crimping is possible).
  - Refer to AMPSEAL table (in section *Accessories and Ordering Codes*) for dimensions.
  - Take extra care for protecting the cables against physical wear and damage.
- Only one wire can be connected to one AMPSEAL connector pin. However, if more than one wire has to be connected to one connector pin, it has to be connected by branch wiring.
- Some voltage inputs use relatively low voltages.
  - Consider using shielded cables for these encoders etc. especially for longer distances to increase safety
- Using shielded cable is recommended also in joystick connections.

Epec Oy reserves all rights for improvements without prior notice

Epec Oy	Postal address	Phone	Fax	Internet
Tiedekatu 6	PL/P.O.Box 194	+358-(0)20-7608 111	+358-(0)20-7608 110	www.epec.fi
FIN-60320 Seinäjoki	FIN-60101 Seinäjoki, Finland			

The following figure describes the closed loop wiring:

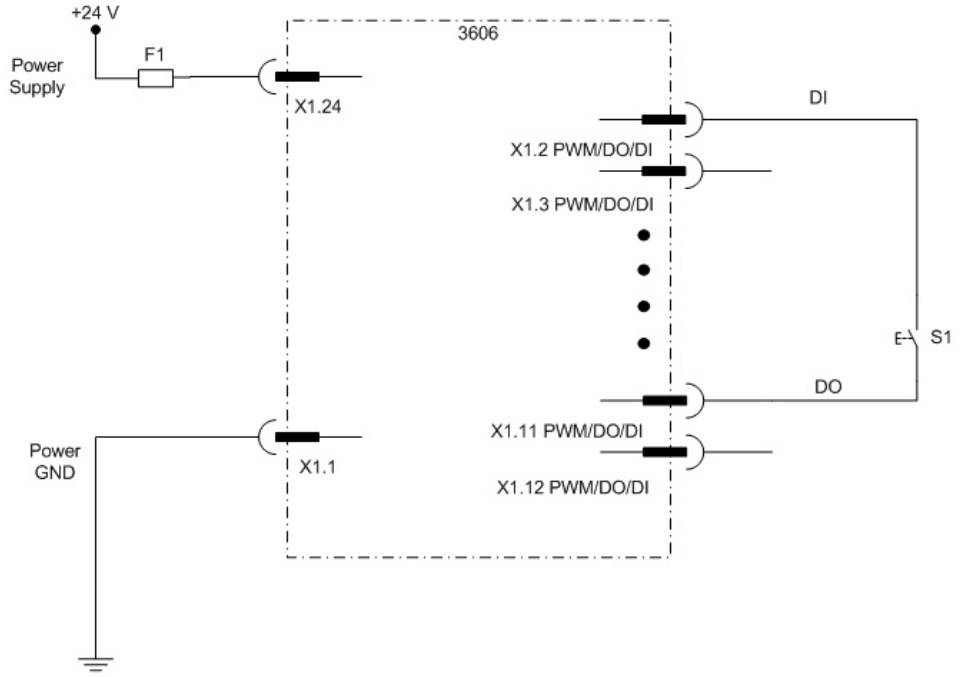

Do not connect the closed circuit loop as shown in the following figure:

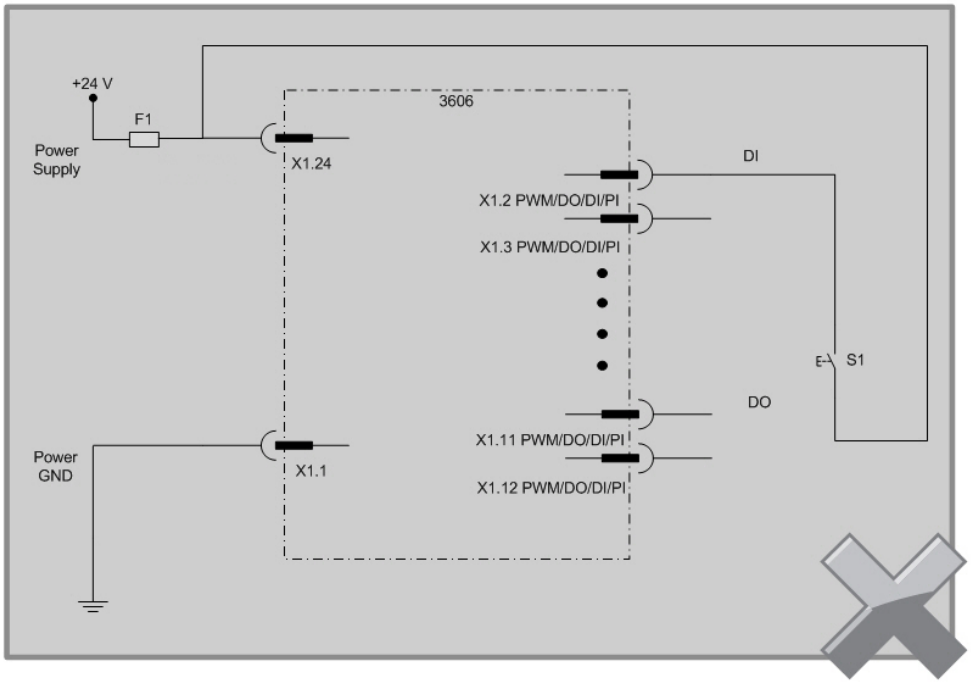

Epec Oy reserves all rights for improvements without prior notice

Epec Oy	Postal address	Phone	Fax	Internet
Tiedekatu 6	PL/P.O.Box 194	+358-(0)20-7608 111	+358-(0)20-7608 110	www.epec.fi
FIN-60320 Seinäjoki	FIN-60101 Seinäjoki, Finland			

The following figure describes four different ways to connect closed circuit loop through the control unit:

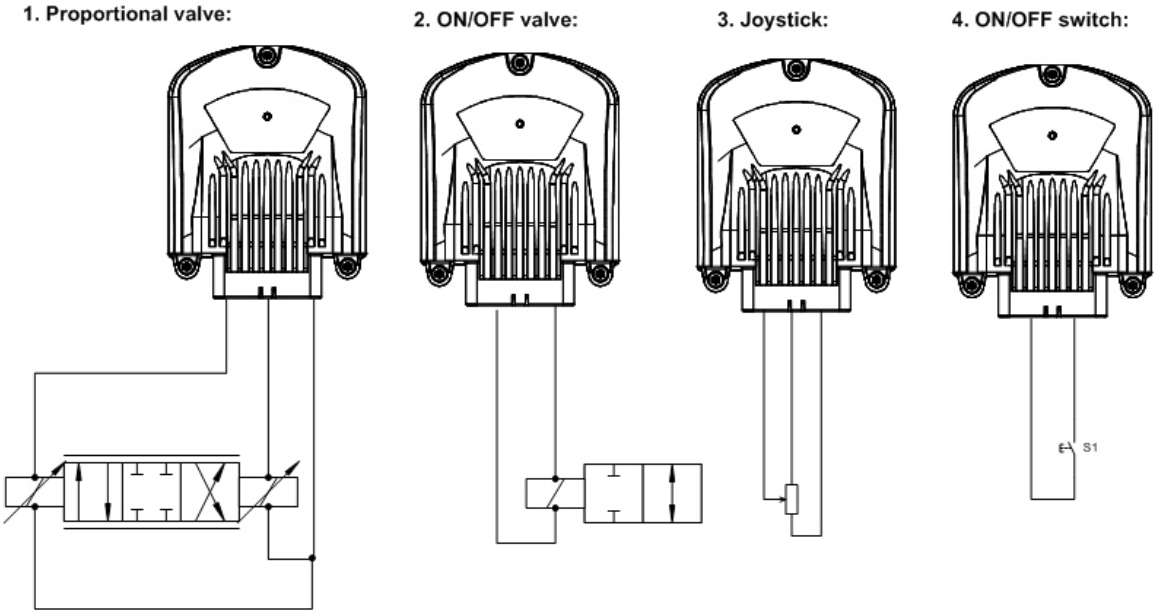

The following figure describes three different ways to connect open circuit loop (from the control unit's point of view):

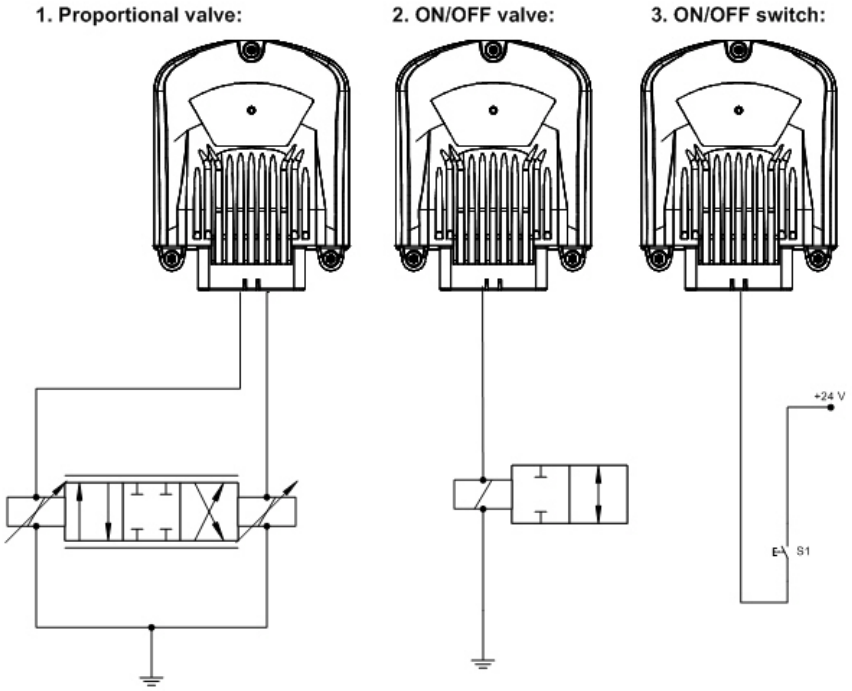

Epec Oy reserves all rights for improvements without prior notice

Epec Oy	Postal address	Phone	Fax	Internet
Tiedekatu 6	PL/P.O.Box 194	+358-(0)20-7608 111	+358-(0)20-7608 110	www.epec.fi
FIN-60320 Seinäjoki	FIN-60101 Seinäjoki, Finland			

AI - GND cabling examples (use separate GND pin for AI pins):

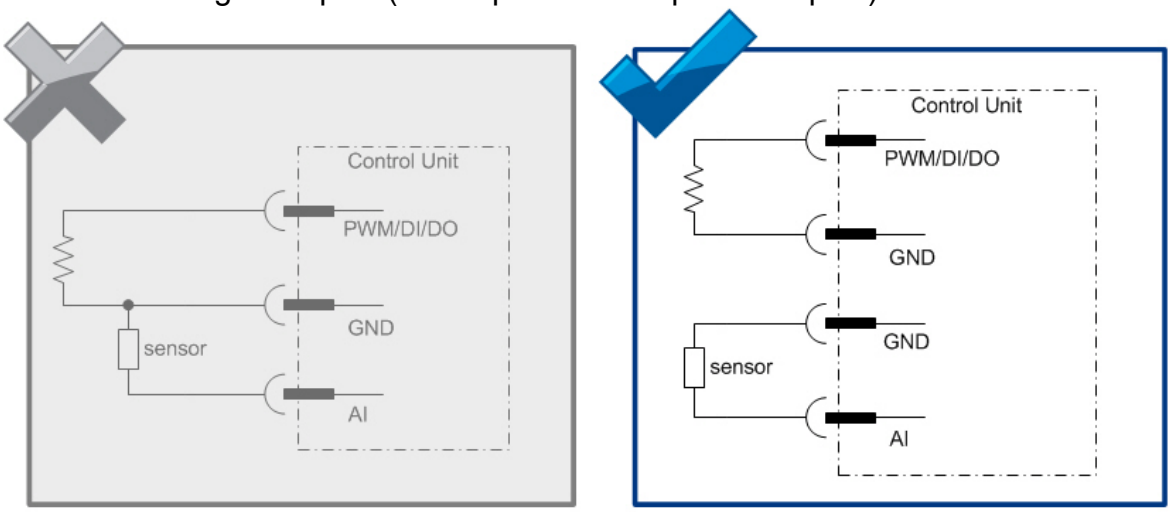

- All sensors and encoders must be wired according to the closed-loop principle, i.e. the power for the sensors and encoders is supplied by the control unit they are connected to. This way, it is possible to avoid potential harmful differences, so the MOSFET driven output power switching operates properly.

When designing the sensor and encoder connections, observe single-point grounding. Each control unit connector has several GND pins which should be used. Refer to section *Power Supply* for accurate pin allocation of connectors.

Power Supply Cabling

The maximum continuous current per pin is 10 A.

The power for sensors, encoders and other equipment should be supplied from the very same unit that the equipment is connected to, to ensure the best performance of the system. No external power (or ground) connections are allowed.

- The nominal operating voltage for Epec control units is 12 and 24 VDC. The full operating range is 8,5 - 33 VDC.
- See section *Power Supply* for accurate pin allocation of the connectors when using Epec 3610 control unit.
- Single point grounding should be used for power supply for all the control units.

Epec Oy reserves all rights for improvements without prior notice

Epec Oy	Postal address	Phone	Fax	Internet
Tiedekatu 6	PL/P.O.Box 194	+358-(0)20-7608 111	+358-(0)20-7608 110	www.epec.fi
FIN-60320 Seinäjoki	FIN-60101 Seinäjoki, Finland			

Power supply's wiring example:

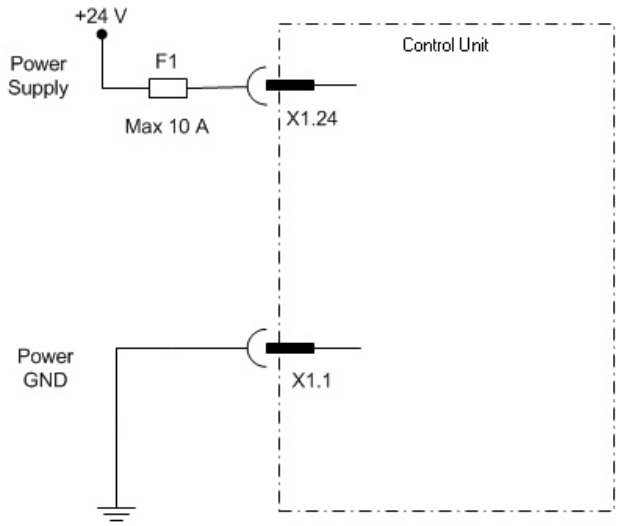

Power supply's wiring:

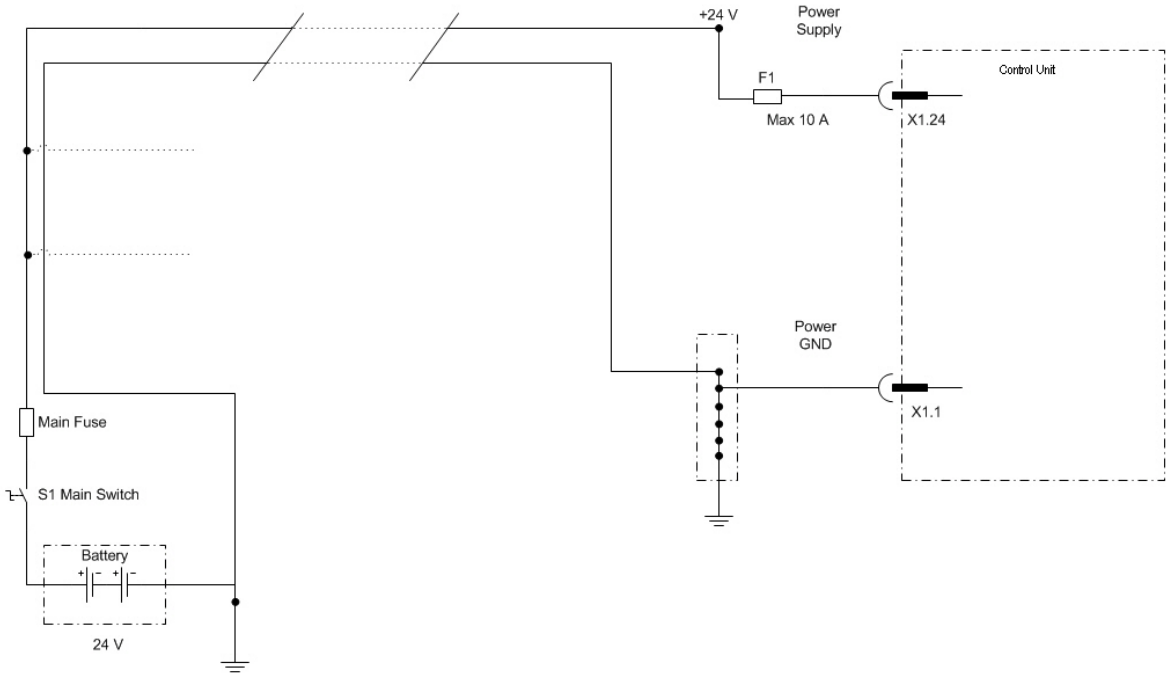

Epec Oy reserves all rights for improvements without prior notice

Epec Oy	Postal address	Phone	Fax	Internet
Tiedekatu 6	PL/P.O.Box 194	+358-(0)20-7608 111	+358-(0)20-7608 110	www.epec.fi
FIN-60320 Seinäjoki	FIN-60101 Seinäjoki, Finland			

Emergency Stop



In all European Community countries, the emergency stop should be implemented in accordance with standard EN ISO 13850, which complies to the EC Machinery directive 2006/42/EC. In other countries, the emergency stop should be implemented according to local standards and/or to local legislation.

Epec Oy reserves all rights for improvements without prior notice

Epec Oy	Postal address	Phone	Fax	Internet
Tiedekatu 6	PL/P.O.Box 194	+358-(0)20-7608 111	+358-(0)20-7608 110	www.epec.fi
FIN-60320 Seinäjoki	FIN-60101 Seinäjoki, Finland			

Welding



Welding causes some high current flows and voltage peaks in the machine. It should be noted that the electronics of the control system may be damaged, if the welding current can get through the control unit itself.
So, when welding, it should be taken care to prevent high currents from going through the control units or through the CAN bus.

Follow carefully the following instructions.



Disconnect all the connectors from the control units before welding.



Generally, even if the control system power is disconnected, welding should be done carefully and by following appropriate safety measures. Welding grounding should be connected close to the welding point to avoid long distance high current flow through machine frame.

Epec Oy reserves all rights for improvements without prior notice

Epec Oy	Postal address	Phone	Fax	Internet
Tiedekatu 6	PL/P.O.Box 194	+358-(0)20-7608 111	+358-(0)20-7608 110	www.epec.fi
FIN-60320 Seinäjoki	FIN-60101 Seinäjoki, Finland			

Accessories and Ordering Codes

Related products

Picture	Product Name	Epec ordering code	Epec data sheet code
	Measuring adapter Includes: - 1 AMP35/AMP35 connector cable - 2 connector pliers - 5 black banana plug connector cables - 5 red banana plug connector cables	E3003510	MAN000512
	CAN adapter	E3003509	MAN000513
	3500 CAN Adapter Box	E3003500	MAN000385
	Power supply & CAN cable for 3000, 4000, and 5000 series control units (2 m, AMP35 - AMP8 (Power & 2 x CAN), 29 x flying leads (other I/O pins))	E30902491	
-	Kvaser CAN Card	E0000038	-

Epec Oy reserves all rights for improvements without prior notice

Epec Oy
Tiedekatu 6
FIN-60320 Seinäjoki

Postal address
PL/P.O.Box 194
FIN-60101 Seinäjoki, Finland

Phone
+358-(0)20-7608 111

Fax
+358-(0)20-7608 110

Internet
www.epec.fi

AMPSEAL Connectors

Epec uses gold plated, locked and sealed AMPSEAL heavy duty connectors for all Epec CAN Control Unit Family products to ensure endurance under extreme conditions.

- All connectors are mechanically keyed to mate only with identical colors

AMPSEAL product	TE Connectivity ordering code	Epec ordering code
AMP 35 pin grey plug (female)	776164-4	KX0351
AMP35 FEM (grey) - flying leads (2m)		E30902451
Contact for AMP plug assembly	770854-3	KX0010
Crimping tool	58529-1	TT0018

AMPSEAL cable dimensions

Size		Insulation diameter range	Strip length ±0,4
mm²	AWG		
0,5	20	1,7 to 2,7	5,1
0,8	18		
1,4	16		
1,5	---	2,2 to 2,4	

Typical hand crimping tool e.g.: AMP Procrimper 58529-1 (TE Connectivity), Epec ordering code TT0018

Epec Oy reserves all rights for improvements without prior notice

Epec Oy
Tiedekatu 6
FIN-60320 Seinäjoki

Postal address
PL/P.O.Box 194
FIN-60101 Seinäjoki, Finland

Phone
+358-(0)20-7608 111

Fax
+358-(0)20-7608 110

Internet
www.epec.fi

Glossary

A

API: Application Programming Interface

B

Boot loader: Boot loader is a software that is needed to load and run the device system. Epec boot loader cannot be updated by the customer.

C

CAN: Controller Area Network

CANopen: Communication protocol and device profile specification for embedded systems used in automation by CAN in automation (CiA) http://www.can-cia.org/

CODESYS: Controller Development System

CPU: Central Processing Unit

E

ECC: Error-correcting code memory

F

Firmware: Firmware is the device software programmed into memory contained in the hardware. Epec firmware can be updated by the customer, Epec firmware does not include boot loader.

G

GFG: Glass-Film-Glass. A touchscreen panel with a robust glass surface designed for harsh environmental conditions.

GPS: Global Positioning System

H

HMI: Human Machine Interface

I

IP class: Ingress Protection Rating, protection class. Classifies the degree of protection provided against the intrusion dust, water etc in mechanical casings and with electrical enclosures. It is published by the International Electrotechnical Commission (IEC).

Epec Oy reserves all rights for improvements without prior notice

Epec Oy	Postal address	Phone	Fax	Internet
Tiedekatu 6	PL/P.O.Box 194	+358-(0)20-7608 111	+358-(0)20-7608 110	www.epec.fi
FIN-60320 Seinäjoki	FIN-60101 Seinäjoki, Finland			

J

J1939: SAE J1939 protocol Vehicle bus standard used for communication and diagnostics

L

LCD: Liquid-Crystal Display. A display that uses liquid crystals' light modulating properties

LED: Light-Emitting Diode. A semiconductor light source used for example in lamps and displays.

M

MB: Megabyte

N

NBR: Nitrile Rubber

O

OVP: Overvoltage Protection

P

PCAP: Projected Capacitive Touch

PCB: Printed Circuit Board

PLC: Programmable Logic Controller

PLCopen: PLCopen is a global standard for industrial control programming. IEC61131

PWM: Pulse-Width Modulation

R

RTC: Real-Time Clock

RTR: Remote Transmission Request

S

SIM: Subscriber Identity Module. An integrated circuit that stores securely the international mobile subscriber identity (IMSI) and the related key. They are used for identifying and authenticating subscribers on mobile telephony devices

Epec Oy reserves all rights for improvements without prior notice

Epec Oy	Postal address	Phone	Fax	Internet
Tiedekatu 6	PL/P.O.Box 194	+358-(0)20-7608 111	+358-(0)20-7608 110	www.epec.fi
FIN-60320 Seinäjoki	FIN-60101 Seinäjoki, Finland			

T

TFT: Thin-Film-Transistor display. A display that uses thin-film transistor technology to improve image qualities such as addressability and contrast.

U

USB: Universal Serial Bus. An industry standard developed to standardize the connection of computer peripherals.

UTC: Coordinated Universal Time

UVP: Undervoltage Protection

W

WVGA: Wide Video Graphics Array. A display resolution with the same 480 pixel height as VGA but wider, such as 800×480 (5:3).

Epec Oy reserves all rights for improvements without prior notice

Epec Oy	Postal address	Phone	Fax	Internet
Tiedekatu 6	PL/P.O.Box 194	+358-(0)20-7608 111	+358-(0)20-7608 110	www.epec.fi
FIN-60320 Seinäjoki	FIN-60101 Seinäjoki, Finland			