Epec 3606 Control Unit

Technical Manual and Cabling Instructions

MAN000618

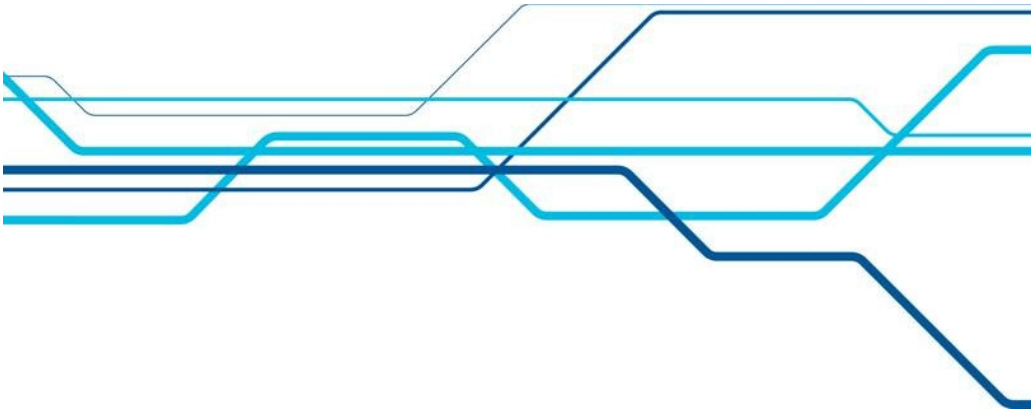

Functional version

3606-23

Document version history

Date	Notes
01.04.2015	First released version

Classification: Public

© Epec Oy

Table of Contents

1 PREFACE 4
1.1 Use of Symbols 4
1.2 Basic Skills Required 5
1.3 Safety Guidelines 6
1.4 Warranty 7
1.5 Limited Liability 8
1.6 Environmental Statement 9

2 PRODUCT OVERVIEW 10

3 TECHNICAL DATA 12

4 INPUT / OUTPUT SPECIFICATIONS 14
4.1 I/O List 3606 14
4.2 Configurable I/Os 16
4.3 PWM/DO/DI_Type037_1 17
4.3.1 Output (PWM/DO) 17
4.3.2 Input (DI) 17
4.3.3 Functional Block Diagram 18
4.4 DI/PI_Type039_1 19
4.4.1 Functional block diagram 19
4.5 AI/DI_Type062_1 20
4.5.1 DI 20
4.5.2 Functional block diagram 21
4.6 FB/AI_Type061_2 22
4.6.1 Functional Block Diagram 22
4.7 +5V REF_Type041_4 23
4.7.1 Protection Features 23
4.7.2 Voltage Monitoring 23
4.7.3 Functional Block Diagram 24
4.7.4 Diagnostics 24
4.8 Power Supply 26
4.8.1 Overvoltage Protection 26
4.8.2 Power Consumption 26

5 BUS CONNECTIONS 28
5.1 CAN Bus 28
5.1.1 CAN interface 28
5.1.2 CAN bus connection pins 28

6 INTERNAL DIAGNOSTICS 29
6.1 Temperature and Voltage Monitoring 29
6.1.1 Temperature 29
6.2 LED Indicator 30
6.3 Error Log 33

7 APPROVALS AND SAFETY 34
7.1 EMC Tests 34
7.2 Environmental Tests 40

8 MECHANICS AND CABLING 42
8.1 Unit Dimensions 42
8.2 Mounting and Cleaning 44
8.3 Plugging and unplugging the connectors 47
8.4 Cabling 49
8.4.1 System Topologies 49
8.4.2 CAN Bus Cabling 53

Epec Oy reserves all rights for improvements without prior notice

8.4.3 I/O Cabling *55*
8.4.4 Power Supply Cabling *58*
8.5 Welding *60*
8.6 System Examples *61*
8.7 Accessories and Ordering Codes *63*

Epec Oy reserves all rights for improvements without prior notice

Epec Oy

Postal address
PL/P.O.Box 194
FIN-60101 Seinäjoki, Finland

Phone
+358-(0)20-7608 111

Internet
www.epec.fi

1 PREFACE

1.1 Use of Symbols

This manual uses the following symbols to point out important information or safety instructions:



The information icon indicates important information and issues to be noted for the reader.



The caution icon indicates very important information or a warning. If the advices are ignored, it can result in personal injury or damage to software or equipment.



The (electrical) warning icon indicates a hazard which could cause an electrical danger and/or a personal injury.



CE compatibility

This symbol indicates that the product described in this manual complies with the requirements set in the CE Standard.



WEEE symbol
This symbol indicates that the product must be sent to separate collection facilities for recovery and recycling when the end-user wishes to discard the product.



E17 Approval
This product is certified with normal automotive (E17) EMC (electromagnetic compatibility) standards.

Epec Oy reserves all rights for improvements without prior notice

1.2 Basic Skills Required

The user of this document must have basic knowledge of machine controlling, CAN communication, PLCopen programming according to IEC61131-1 and should have skills to use CODESYS 2.3/3.5 programming environment.

Please refer to CODESYS 2.3/3.5 manual for further information concerning the programming environment and required installations.

Please refer to CAN and CANopen documentation from CAN in Automation (CiA) for further information on communication issues.

Epec Oy reserves all rights for improvements without prior notice

1.3 Safety Guidelines

The user of this documentation should follow general machine safety guidelines, directives and regulation appropriate to his/her country or market area.

A separate safety analysis is always recommended for the machine and its control system. The features of this product should be well documented in machine and control system documents so that the machine operator has the right information how to operate the machine correctly and safely.

This product is designed to be used only for machine controlling purposes. The manufacturer does not assume any responsibility for this product being fit for any particular application, unless otherwise expressly stated in writing by the manufacturer.

This product complies with those certifications and standards that are listed below. The manufacturer does not guarantee that this product complies any other certification, standard or test than listed below.

This product is not field serviceable, so it should not be opened at any situation.

External fuses should be installed for the product or the system power supply.

The system should be designed and constructed according to the Epec general mounting and cabling instruction document.

Epec Oy reserves a right to improve its products without a further notice.

Epec Oy reserves all rights for improvements without prior notice

Epec Oy

Postal address
PL/P.O.Box 194
FIN-60101 Seinäjoki, Finland

Phone
+358-(0)20-7608 111

Internet
www.epec.fi

1.4 Warranty

The manufacturer does not assume any responsibility for the products being fit for any particular purpose, unless otherwise expressly stated in writing by the manufacturer.

The manufacturer gives the warranty of twelve (12) months to the products and thereto related firmware from commissioning or eighteen (18) months from the date of delivery of the products which ever occurs first.

The manufacturer is during the warranty period responsible for defects in the products and thereto related firmware resulting from faults in material, design or workmanship. The manufacturer's only obligation under this warranty is to, at its sole discretion, either to replace the products and/or thereto related firmware or to repair the defective products. The manufacturer shall, at its sole option, repair the products at its manufactory in Seinäjoki, Finland.

The warranty does not cover any costs related to removing or fastening of devices related to the products. Neither does the warranty cover the expenses of sending devices to or from the manufacturer for repairs. The warranty does not cover possible expenses relating to travelling, accommodation, daily benefits, etc. of installers.

The warranty becomes null and void if the buyer and/or a third party alters the products or the firmware in any way or if they are not used in accordance with the Manufacturer's operating instructions.

All claims with respect to defects in the products shall be made to the manufacturer without delay and no later than on the seventh (7th) day after the defect has been or should have been discovered by the buyer. The manufacturer strives to reply to the claim in writing within two (2) weeks from the receipt of the claim. The buyer shall attach to the claim a possible error report or equivalent explanation of the grounds for the claim.

The manufacturer gives no other warranties whatsoever for the products than the warranty set out in this section and thus the warranty given in this section sets forth the warranty given by the manufacturer in its entirety.

Epec Oy reserves all rights for improvements without prior notice

Epec Oy

Postal address
PL/P.O.Box 194
FIN-60101 Seinäjoki, Finland

Phone
+358-(0)20-7608 111

Internet
www.epec.fi

1.5 Limited Liability

The manufacturer shall under no circumstances be liable for loss of production, loss of profit, loss of use or any other consequential damages and/or indirect losses, whatever their cause may be. In case claims based on product liability are brought against the Manufacturer for which claims the manufacturer may be liable, the manufacturer's liability is limited to the extent normally covered under normal product liability insurances.

The buyer shall compensate the manufacturer to the extent that the manufacturer might be liable to pay damages as a result of claims based on product liability according to paragraph above.

Epec Oy reserves all rights for improvements without prior notice

Epec Oy
Postal address
PL/P.O.Box 194
FIN-60101 Seinäjoki, Finland
Phone
+358-(0)20-7608 111
Internet
www.epec.fi

1.6 Environmental Statement

The manufacturer uses ISO14001 environmental certified processes and materials to manufacture products. The manufacturer undertakes to arrange for the recycling and scrapping of the products that are returned to the manufacturer by the buyer and/or the products that are received by the Manufacturer in connection with maintenance services performed as a result of that repairing of the products is deemed by the manufacturer to be inappropriate.

The manufacturer will charge a scrapping fee from the buyer according to the manufacturer's price list in force from time to time. No scrapping fee will, however, be charged for products that are received by the manufacturer during the warranty period.

WEEE
This product complies with the European Community Directive 2012/19/EU on waste electrical and electronic equipment (WEEE) encouraging and setting specific criteria for the collection, handling and recycling of electric and electronic waste.

RoHS
This product complies with the European Community Directive 2011/65/EU (RoHS) restricting hazardous substances such as quicksilver and lead in electrical and electronic equipment.

Epec Oy reserves all rights for improvements without prior notice

2 PRODUCT OVERVIEW



Epec 3606 Control Unit is a compact and robust multifunction controller with 16/32 bit processor and high calculating power. Epec 3000 product platform is fully compatible to the existing Epec product portfolio. Some of the advances of the Epec 3606 Control Unit are listed below.

Multifunctional Efficiency

- A multifunction controller
  - 16/32 bit processor
  - high calculating power
- Can be used used in a CAN control unit system as a multifunction controller with different kinds of sensors and actuators, such as
  - proportional valves,
  - servo motors, and
  - electro-hydraulic components
- Provides control system solutions for both centralized and distributed intelligence systems
- Fully compatible with the existing Epec product portfolio

Mechanics & hardware

- Robust, light and leak proof zinc/plastic cover has been widely tested against different chemicals and environmental conditions
- The shape of the casing works to protect the electronics inside against mechanical wear.
- Three point anchorage confirms firm mounting also on irregular surfaces
- Signal LED for quick status check and fault detection
- Equipped with gold plated, heavy duty AMPSEAL connectors
- The connector is colour coded and mechanically keyed
- One CAN is equipped with double pins, which makes cabling easier since there is no need for branches in the wire harness.
- Made in Finland

Versatile I/O capabilities

- Total of 21 I/O pins
- Most pins have multipurpose features
- All I/O pins are equipped with a short-circuit protection

Epec Oy reserves all rights for improvements without prior notice

Application programming

- Application downloading is possible through CAN bus
- Epec products are based on PLCopen and CANopen®, which make them easily scalable to meet requirements for both small and large machines
- Open I/O and communication interface, thus making it possible to connect
  - sensors,
  - actuators,
  - joysticks, and
  - other devices

  from other manufacturers to optimize the whole machine environment, both technically and ergonomically.
- Internal diagnostics which makes it possible to
  - detect e.g. overvoltage and overtemperature alarms and
  - program customized log applications

Epec Oy reserves all rights for improvements without prior notice

3 TECHNICAL DATA

Processor	16/32 bit CPU, 100 MHz
Memory	Flash memory: total 1600 kbytes RAM memory: 138 kbyte (112 kbyte for PLCopen application variables) Non-volatile memory: 2 kbyte PLCopen application size up to 768 kbyte
Power	Nominal supply voltage 12/24 VDC systems (8,5 ... 33 VDC) Idle power consumption 1,3 W (+24 VDC, no external load)
REF voltage outputs	+5 V
Diagnostics	Signal LED (green/red) Supply voltage Unit temperature REF voltage monitoring
Protection functions	Overvoltage protection Short-circuit protection for outputs
Programming	CODESYS 2.3
Software installation	Download via CAN1
Protection class	IP67
Size / Outer dimensions	138 x 108 x 44,5 mm 5.433 x 4.252 x 1.752 in
Weight	0,44 kg 0.97 lbs
Case material	Zinc / plastic
Operating temperature	-40... +85˚C -40...+185˚F
Storage temperature	-40... +85˚C -40...+185˚F
Connectors	1 x AMP35 (grey)

Epec Oy reserves all rights for improvements without prior notice

Communications / Interfaces	2 x CAN 2.0 B	
I/O pins total	21	
Outputs	8x	PWM/DO/DI (sourcing, up to 3 A, PWM frequency by application)
Inputs	5x	DI/PI (pull-down to GND)
	4x	AI/DI (0-5 V / 0-22 mA selection by application)
	4x	FB/AI (current measuring feedback 0-2 A)

Epec Oy reserves all rights for improvements without prior notice

4 INPUT / OUTPUT SPECIFICATIONS

4.1 I/O List 3606

The connector is placed in the control unit according to the following figure:

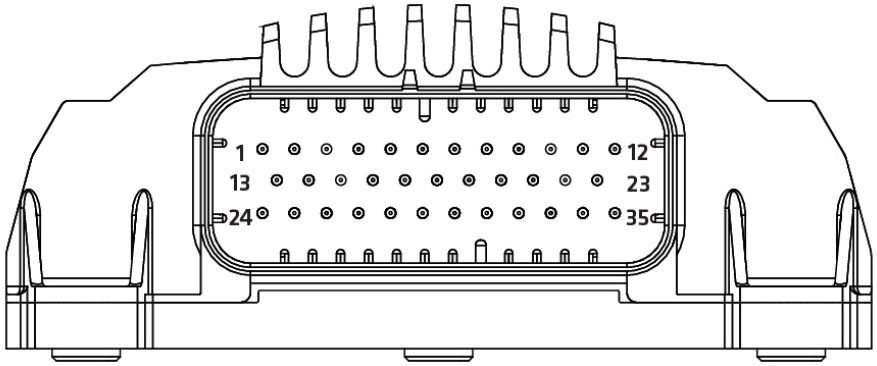

The following table lists the pins according their pin number. Other columns offer quick information about the pin and links for more information.

Pin number	Pin type	Details	Current / Voltage	Description
First row:				
X1.1	GND			Supply GND connection
X1.2	PWM/DO/DI_Type037_1	12 kΩ GND	Nominal current 3 A	
X1.3	PWM/DO/DI_Type037_1	12 kΩ GND	Nominal current 3 A	
X1.4	CAN2H			
X1.5	CAN1H			
X1.6	CAN1H			
X1.7	PWM/DO/DI_Type037_1	12 kΩ GND	Nominal current 3 A	
X1.8	PWM/DO/DI_Type037_1	12 kΩ GND	Nominal current 3 A	
X1.9	PWM/DO/DI_Type037_1	12 kΩ GND	Nominal current 3 A	
X1.10	PWM/DO/DI_Type037_1	12 kΩ GND	Nominal current 3 A	
X1.11	PWM/DO/DI_Type037_1	12 kΩ GND	Nominal current 3 A	
X1.12	PWM/DO/DI_Type037_1	12 kΩ GND	Nominal current 3 A	
Second row:				
X1.13	LOADER BSL	For factory use only		
X1.14	DI/PI_Type039_1	12 kΩ GND		SW counter
X1.15	DI/PI_Type039_1	12 kΩ GND		HW counter
X1.16	CAN2L			
X1.17	CAN1L			

Epec Oy reserves all rights for improvements without prior notice

X1.18	CAN1L			
X1.19	CAN1L_Terminator			
X1.20	AI/DI_Type062_1	82,2 kΩ / 220 Ω GND	0-5 V / 0-22 mA	
X1.21	AI/DI_Type062_1	82,2 kΩ / 220 Ω GND	0-5 V / 0-22 mA	
X1.22	FB/AI_Type061_2	0,1 Ω GND	0-2 A	
X1.23	FB/AI_Type061_2	0,1 Ω GND	0-2 A	
Third row:				
X1.24	Power Supply			Supply connection
X1.25	DI/PI_Type039_1	12 kΩ GND		SW counter
X1.26	DI/PI_Type039_1	12 kΩ GND		HW counter
X1.27	DI/PI_Type039_1	12 kΩ GND		HW counter
X1.28	REF +5V_Type041_4	+5V 270 mA	5V 270 mA	Shared current with pin 1.29
X1.29	REF +5V_Type041_4	+5V 270 mA	5V 270 mA	Shared current with pin 1.28
X1.30	GND			
X1.31	AI/DI_Type062_1	82,2 kΩ / 220 Ω GND	0-5 V / 0-22 mA	
X1.32	AI/DI_Type062_1	82,2 kΩ / 220 Ω GND	0-5 V / 0-22 mA	
X1.33	GND			
X1.34	FB/AI_Type061_2	0,1 Ω GND	0-2 A	
X1.35	FB/AI_Type061_2	0,1 Ω GND	0-2 A	

Epec Oy reserves all rights for improvements without prior notice

4.2 Configurable I/Os

Control unit contains inputs and outputs or, in other words, I/O pins of many different types. There are, for example, outputs which source current and outputs which sink current. Furthermore, there are I/O pins which can be used as inputs or as outputs at the control of the application programmer.

The following table contains a summary of configurable I/O pins in Epec 3606 control unit:

Max Amount	Pin Type	Info	DI	AI	FB	PI	DO		PWM
							PNP (sourcing)	NPN (sinking)	
8	PWM/DO/DI_Type037_1	3 A	x				x		x
5	DI/PI_Type039_1	pull-down to GND	x			x			
4	AI/DI_Type062_1	0-5 V / 0-22 mA	x	x					
4	FB/AI_Type061_2	0-2 A			x				

Epec Oy reserves all rights for improvements without prior notice

4.3 PWM/DO/DI_Type037_1

4.3.1 Output (PWM/DO)

- This type of pin is a current sourcing output with a pull-down resistor
- These outputs have integrated protection features (overload, overcurrent)
- These outputs are capable to generate pulse width modulated (PWM) output signals.
- This kind of pin can be used with a step motor (for more information refer to the Programming and Libraries manual)



If you want to use current measuring, connect the other end of the load to the feedback pin.



It is recommended to use the function blocks in *DigitalOutputDiagnostics* library to protect and diagnose outputs when used as digital outputs. For more information, refer to *Epec Programming and Libraries Manual*.

4.3.2 Input (DI)

- This pin can be used as a digital input (DI)
- This pin can be used also with PNP-type sensors
- A pin of this type can also be used as an input by using the output state monitoring feature.
  - In those cases the output functionality of the pin must be kept in off state.
- It must be taken care in system design that the output unintentionally switching to on state causes no harm to the system.
- It's highly recommended to use closed loop connections when the output pin is used as input. By keeping this simple principle in your mind you will avoid many unknown problems later on.

Electrical characteristics

Symbol	Parameter	Conditions	Min	Max	Units
R_O	Output Resistance	Output On		0,2	Ω
I_O	Output Current	Output On	0	3	A
$I_{o\text{-}lim}$	Internal current limitation	Output On (Note 1, 2)	typ. 12		A
f_{PWM}	PWM Frequency		10	3000	Hz
$Duty_{PWM}$	Duty Cycle	(Note 3)	0	100,0	%
Res_{PWM}	PWM Resolution			0,1	%

Epec Oy reserves all rights for improvements without prior notice

Digital status input					
R_I	Input Resistance	Output Off; Referenced to GND	typ. 12		kΩ
V_{IH}	Input High Voltage	Output Off (Note 7)	4,1	U_{in}	V
V_{IL}	Input Low Voltage	Output Off	-0,5	3,3	V
f_I	Input frequency (digital input)	50% duty cycle (Note 3, 4)		1/ $2t_C$	Hz
t_I	Digital Status Input Pulse Width	(Note 4, 5)	> t_C		ms
C_I	Input pin capacitance		typ. 1		nF

Note 1: Current limit for short circuit protection to protect cabling and to limit internal power dissipation.
Note 2: When the limit is exceeded, the output voltage circuit starts to limit the current by switching the output voltage. The switching does not effect the application software.
Note 3: The duty cycle is defined as the percentage of digital 'high' to digital 'low' signals present during a PWM period.
Note 4: t_C denotes the software cycle time.
Note 5: The pulse width must be greater that the software cycle time. For example with 50/50 pulse ratio, the pulse frequency is 1 / (2*pulse width)
Note 6: Violating this rating may lead to system not recognizing all input state transitions.
Note 7: Exceeding the max value might cause permanent damage.

4.3.3 Functional Block Diagram

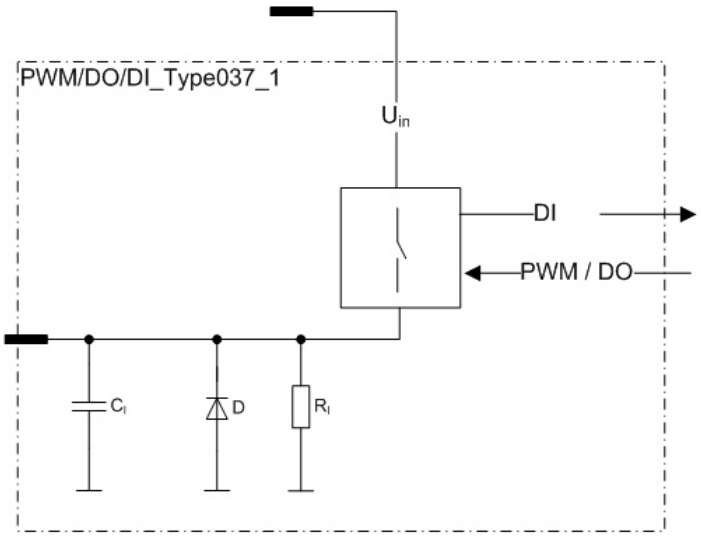

Epec Oy reserves all rights for improvements without prior notice

4.4 DI/PI_Type039_1

- This type of pin is a digital input (DI) including a pulse counting (PI) feature.
- This kind of pins have a pull-down resistor to ground
- Pulse inputs can be used as a 1 or 2 channel pulse counter and they have a possibility for reset pulse. Possible software channels and pairs are listed in Epec Programming and Libraries manual, section *Programming 3606 > I/O > Pulse Inputs*.

Electrical characteristics

Symbol	Parameter	Conditions	Min	Max	Units
R_I	Input Resistance	Input high; Referenced to GND (Note 3)	11,5 7,5	12,5	kΩ
		Input Low; Referenced to 1,3 V	7,5	8	kΩ
$V_{I\text{-level}}$	Input voltage level	Unconnected pin	typ. 1,3		V
V_{IH}	Input High Voltage	Overload conditions (Note 1)	4,1	33	V
V_{IL}	Input Low Voltage		-0,5	3,3	V
f_I	Input Frequency (frequency measurement and pulse counting)	(Note 5, 6)		20	kHz
f_I	Input Frequency (digital inputs)	(Note 2, 4)		$1/ 2t_C$	kHz
t_I	Input Pulse Width		1	10000	ms
C_I	Input Capacitance		typ. 1		nF

Note 1: Exceeding the max value might cause damage to input.
Note 2: t_C denotes the software cycle time in milliseconds.
Note 3: The input resistance is typically 12 kΩ, while input voltage is < 15 V. When input voltage increases over 15 V, the input resistance decreases in a non-linear function.
Note 4: The pulse width must be greater that the software cycle time. For example, with 50/50 pulse ratio, the pulse frequency is 1 / (2*pulse width)
Note 5: The maximum value can be reached with 50 % duty cycle.
Note 6: The maximum frequency sum for all the pins is 40 kHz.

4.4.1 Functional block diagram

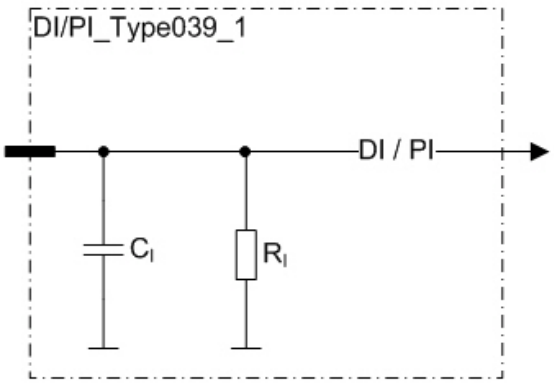

Epec Oy reserves all rights for improvements without prior notice

4.5 AI/DI_Type062_1

- These pins are analog inputs
- The pins can be configured either as a current input or as a voltage input.
- There is a control signal for selecting:
  - Voltage mode: High impedance input for signal from 0 to 5 V
  - Current mode: Low impedance input for signal from 0 to 22 mA
- Pins of this kind can be used as e.g. joystick connection when 82,2 kΩ GND (voltage input) is selected.
- The input impedance of each pin is controlled by a bit in output memory (%Q)



When configured to current mode, analog inputs can be protected against overvoltage by using *3000AnalogInputProtection* programming library. For more information, refer to *Epec Programming and Libraries Manual*.

4.5.1 DI

- These pins can also be used as digital inputs by using an application library.
- The pin must be configured to voltage mode when using as digital input

Electrical characteristics

Symbol	Parameter	Conditions	Min	Max	Units
V_I	Input Voltage measuring range		0	5	V
R_I	Input Resistance	Voltage mode (referenced to GND)	typ. 82,2		kΩ
		Current mode	typ. 220		Ω
I_I	Input Current measuring range		0	22,7	mA
I_E	Input Error	Voltage mode		0,18	V
		Current mode		0,8	mA
BW	Input Low Pass Filter Bandwidth	-3 dB cut-off frequency	typ. 100		Hz
C_I	Input pin capacitance		typ. 1		nF
$V_{I\text{-range}}$	Input voltage range	Voltage mode (Note 1)	-0,5	33	V
		Current mode (Note 1)	-0,5	15	V

Note 1: Exceeding the max value might cause damage to input.

Epec Oy reserves all rights for improvements without prior notice

4.5.2 Functional block diagram

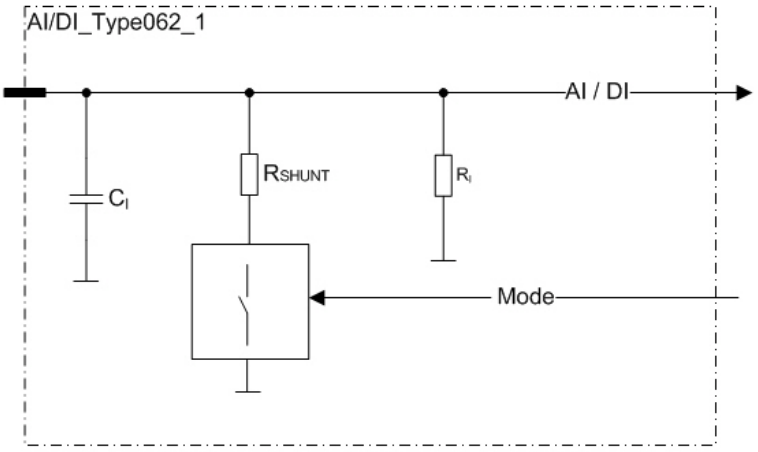

Epec Oy reserves all rights for improvements without prior notice

4.6 FB/AI_Type061_2

- This type of pin is 0-2 A current measuring feedback
- These pins are normally used as a return path for the loads of PWM outputs
- These kinds of pins have a small shunt resistor connected to ground
  - The shunt resistor is used to measure the current flowing through the load
- Nothing prevents using these pins to measure currents from other sources as well

Electrical characteristics

Symbol	Parameter	Conditions	Min	Max	Units
R_I	Input Resistance		typ. 0,1		Ω
I_I	Input Current	Analog measuring range	0	2,27	A
		(Note 1)		2,3	A
BW	Input Low Pass Filter Bandwidth	-3 dB cut-off frequency (Note 2)	typ. 27		Hz
I_E	Input Error	I_I = 2 A; Calculated		135	mA

Note 1: Exceeding the max value might cause damage to input.
Note 2: 2nd order low pass filter

4.6.1 Functional Block Diagram

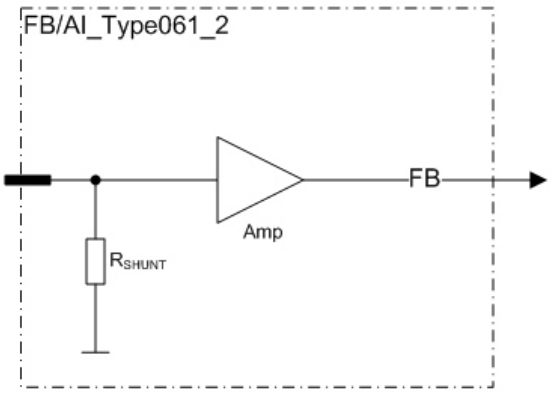

Epec Oy reserves all rights for improvements without prior notice

4.7 +5V REF_Type041_4

- This is an internally regulated and monitored reference voltage supply for external devices.
- This reference output can be switched on/off by application.

4.7.1 Protection Features

- Overcurrent
- External voltage protection
- Errors are indicated with a fault signal

4.7.2 Voltage Monitoring

The level of the output voltage can be monitored by application.

Electrical characteristics

Symbol	Parameter	Conditions	Min	Max	Units
$V_{o\text{-}level}$	Output voltage	Output On; Unconnected pins	typ. 5		V
R_o	Output Resistance	Output On		0,46	Ω
I_o	Nominal Output Current	Output On; Max total for all pins together	0	270	mA
$I_{o\text{-}lim}$	Internal Current Limitation	Output On (Note 2, 3)	typ. 370		mA
$I_{o\text{-}sc}$	Short-circuit Current Limit	Output On; Overcurrent	typ. 270		mA
C_o	Output Capacitance		typ. 4,7		uF
$V_{I\text{-}max}$	Max Input voltage	Overload conditions (Note 1)		33	V
Voltage monitoring					
$V_{I\text{-}range}$	Nominal Voltage measuring range		0	5	V
	Fault-signal overvoltage threshold	Overvoltage	Typ. 5,2		V
	Fault-signal activation time	Overvoltage / Overload		10	ms

Note 1: When output voltage is under overload conditions, for example, short circuit to supply voltages. Exceeding the max value might cause damage to output.
Note 2: Current limit for overcurrent protection to limit internal power dissipation.
Note 3: When the limit is exceeded, the output current is regulated. In regulation, the output is switched into overcurrent mode.

Epec Oy reserves all rights for improvements without prior notice

4.7.3 Functional Block Diagram

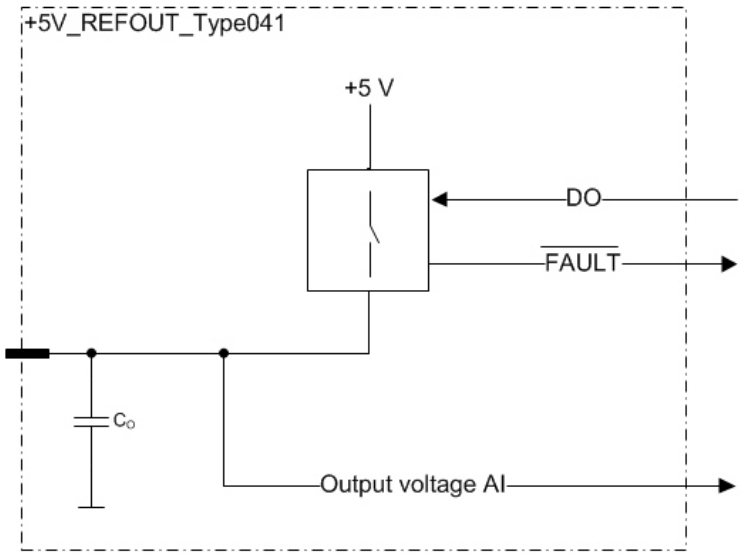

4.7.4 Diagnostics

The +5V reference supply has two diagnostics checks:

- analog output voltage monitoring and
- dedicated digital fault-signal

Both can be used to indicate overload and overvoltage situations. The diagnostics are independent from each other.

For fastest and most reliable error detection, it is recommended to use both output voltage monitoring and fault-flag diagnostics to detect errors.

4.7.4.1 OVERLOAD

The diagnostics can detect overcurrent situation. The fault-signal is activated when excessive current is taken from the output. The output current is regulated when internal current limit is reached. The regulation current is always smaller than the limit. Current regulation causes the output voltage to drop with increasing load. This can be detected, using the output voltage monitoring feature, by setting a minimum (low) value limit for the output voltage.

With large enough loads, the output is switched temporarily off to protect the output from overheating. This is indicated by the fault-signal.
The fault-signal is deactivated, when the error source is removed by decreasing the load or when the output is turned off.

Overheat protection of the +5V REF can cause spurious errors in other analog measurements. Thus it is recommended to turn off the output when fault-signal becomes active.

Epec Oy reserves all rights for improvements without prior notice

4.7.4.2 OVERVOLTAGE

Overvoltage event caused by an external source can be detected by using a combination of the diagnostic features. The fault-signal is activated when pin voltage goes above the fault-signal overvoltage threshold level. If the output voltage monitoring value is 5 V (or more) and the fault-signal is active, it can be determined that an external voltage source is connected to the output pin.

The output pins are protected against external voltages, but it is not recommended to connect external voltage sources to these pins.



In case of a limit violation, the output should be disabled as soon as possible. The control unit can handle short term errors, but long term (e.g. several hours) exposures should be avoided with application/system design. Long term exposure to overvoltage or overload can cause permanent damage to the unit.

Epec Oy reserves all rights for improvements without prior notice

4.8 Power Supply

- Nominal supply voltage 12/24 VDC
- Operating range 8,5…33 VDC
- Undervoltage reset ≤ 8 VDC

4.8.1 Overvoltage Protection

- Max. 70 V (Stresses above this value may cause permanent damage to the module.)
- Control unit has a shutdown circuit which protects the unit and loads against overvoltage. The shutdown circuit cuts off the power feed for the logic and loads in case of overvoltage. The shutdown circuit is activated when voltage reaches circa 35 V. Power feed is restored when supply voltage drops to 32,5 V.

4.8.2 Power Consumption

- Approx. 1,3 W (+24 VDC, no external load)
- Supply Voltage (U_{in}) maximum continuous current 10 A (with full external load)
- GND current sum max 10 A

In this control unit, there is only one power supply pin (X1.24).
The ground pin (X1.1) is the recommended pin for the power supply return line. The following table shows the power supply pin locations.

Power supply pins

Designation	Connector / pin number	Potential
Supply voltage (for logic and power)	X1.24	+12/+24 VDC (+8,5…33 VDC)
Ground (for supply voltage)	X1.1	GND
I/O ground	X1.30 X1.33	GND
Supply outputs		
Reference supply (for external devices)	X1.28 X1.29	+5 VDC / max 270 mA (max total for all pins together)



Always use an external fuse to protect the control unit. The fuse is needed for reverse voltage and overload protection.

Epec Oy reserves all rights for improvements without prior notice

Electrical characteristics

Symbol	Parameter	Conditions	Min	Max	Units
V_I	Nominal Input voltage		8,5	33	V
$I_{TOT-max}$	Max Total Current Output			10	A
$V_{I-Load-dump}$	Max Input transient Voltage level	(Note 1)		100	V
V_{I-max}	Max Continuous Input Voltage Level	(Note 2)	-0,5	40	V
V_{I-ovp}	Overvoltage Protection Cut-off Level		33	36,5	V
	Overvoltage Cut-off Hysteresis		typ. 2		V
V_{UVP}	Undervoltage Threshold Level		typ. 7,5		V
Supply voltage monitoring					
$V_{I-range}$	Nominal Input Voltage measuring range		0	46	V

Note 1: Load dump protection according to ISO7636-2: 2004 pulse 5, Us=+70V
Note 2: If the voltage is less than 8,5 V or higher than 33 V, the control unit is in non-operational state.

Epec Oy reserves all rights for improvements without prior notice

5 BUS CONNECTIONS

5.1 CAN Bus

5.1.1 CAN interface

- CODESYS 2.3 IDE communication is supported for CAN1.
- Higher layer protocol is user programmable communication
- The physical interface of CAN is according to ISO 11898 and CAN 2.0B protocol
- The PLCopen application can be downloaded via CAN1.
- All interfaces support bit rates 50, 125, 250, 500, 800, 1000 kbit/s
- All interfaces can be configured as listen only mode. An exception is CAN1, which is in boot up normal mode because it is used for CODESYS communication.
- 11-bit and 29-bit message receive and transmit are supported.
- Transmitting of remote frames is supported in all CAN interfaces.
- Receiving one remote frame is supported. This is received for the control unit's own node guard functionality.

5.1.2 CAN bus connection pins

This product has two CAN bus connections. CAN1 has duplicated pins, so it can be easily used for chaining the control units.



It is possible to connect the internal termination resistor in CAN1. For more information refer to section System topologies.

The CAN communication pins are located in the control unit's AMP35 connector as follows:

Designation	Pin number
CAN1 interface, system interface user programmable communication	X1.5 (CAN1 H) X1.6 (CAN1 H) X1.17 (CAN1 L) X1.18 (CAN1 L) X1.19 (CAN1 L terminator)
CAN2 interface, user programmable communication	X1.4 (CAN2 H) X1.16 (CAN2 L)

Epec Oy reserves all rights for improvements without prior notice

6 INTERNAL DIAGNOSTICS

6.1 Temperature and Voltage Monitoring

This unit's internal temperature and incoming operating voltage can be read from the PLCopen addresses with the numerical values and resolutions shown in the following table.

Type	PLCopen address	Precision	Resolution bits	Full reading
Internal Diagnostics				
AI(T_{PCB})	%IW18	≤ ±3,5 %	10	
AI(U_{R2V5})*	%IW17	≤ ±3,5 %	10	5 V
External Diagnostics				
AI(U_{in})	%IW19	≤ ±3,5 %	10	46 V
AI(+5 V REF)	%IW16	≤ ±3,5 %	10	5 V

** Internal precision voltage measurement can be used for internal voltage level monitoring.*

6.1.1 Temperature

This control unit has one temperature sensor for monitoring PCB area temperature. The temperature information is useful for self diagnostic purposes and safety features.

Symbol	Parameter	Conditions	Min	Max	Units
T_{PCB}	Nominal PCB Temperature measuring range		-40	125	˚C
$T_{PCB-err}$	Temperature Measurement Error	-40 .. +100 ˚C		+/- 6	% (FS)
		-55 .. +125 ˚C		+/- 9	% (FS)

Epec Oy reserves all rights for improvements without prior notice

6.2 LED Indicator

The LED indicator light is situated on the top side of the 3606 according to the following figure:

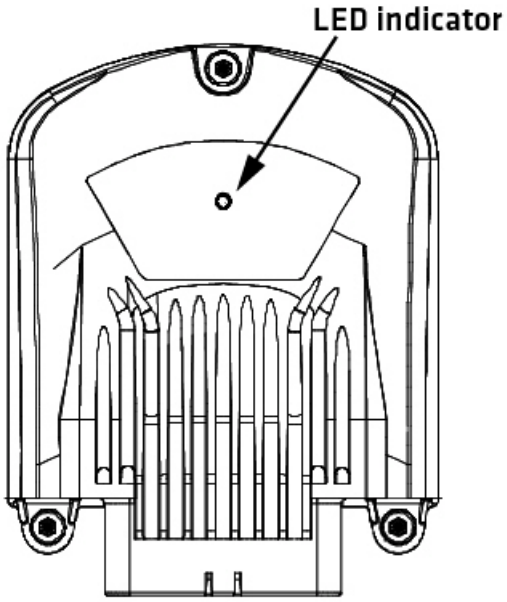

Some of the states must be implemented by using EXT programming library. For more information about EXT programming library, refer to *Epec programming and libraries manual*.

The LED has green and red indicators and they indicate different operating conditions according to the following table:

Epec Oy reserves all rights for improvements without prior notice

LED State	Green LED	Red LED	Implemented in device firmware	Implement by using EXT programming library	Explanation
Off	-	-	X		No supply voltage or an application stop state after a watchdog reset.
Default Application or No User Application	Blinks 5 times/second	-	X		Firmware is running, no PLCopen application or application download in progress
ApplicationOk	Blinks 2 times/ second	-	X		Application is running and the system is OK
Application Stopped or initializing	LED is constantly on	-	X	X	Stopped / Starting / Initializing **Firmware:** LED is continuously on while application is stopped. **EXT Library:** LED is continuously on also during the initialization: starting from power on until the application is running and the I/O / CAN initializations are done.
FatalError	-	LED is constantly on	X		Control unit boot-up failed or a critical firmware error while running.
ApplicationError	-	Blinks 2 times/ second		X	External PLCopen library controls, for example when output controlling is disabled, so called safe state.
IOError	-	Blinks 5 times/second		X	External PLCopen library controls, for example when system is OK but there is short circuit in one of the outputs or other similar error is active (depends of application)

Epec Oy reserves all rights for improvements without prior notice

Update	Blinks alternately with red LED	Blinks alternately with green LED	X		After firmware update boot-up, during the installation phase, red and green LEDs are flashed alternately.

Epec Oy reserves all rights for improvements without prior notice

Epec Oy

Postal address
PL/P.O.Box 194
FIN-60101 Seinäjoki, Finland

Phone
+358-(0)20-7608 111

Internet
www.epec.fi

6.3 Error Log

The control unit's internal error log stores the firmware errors in a log.

For more information about the logs and how to read them, refer to *Epec Programming and Libraries Manual MAN000538*.

Epec Oy reserves all rights for improvements without prior notice

7 APPROVALS AND SAFETY

7.1 EMC Tests

Epec 3606 control units are certified according to EMC tests that are described in this section.

The following tables provide a summary of performed EMC tests:

Emission tests according to the test specification EN 61000-6-3

Emission test	Test method
Radiated disturbance	CISPR 16-2-3
Conducted disturbance at mains ports	CISPR 16-2-1

Immunity tests according to the test specification EN 61000-6-2

Immunity test	Test method
Electrostatic discharge (ESD)	EN 61000-4-2
Radiated radio-frequency electromagnetic field	EN 61000-4-3
Electrical fast transients (EFT/B)	EN 61000-4-4
Surges	EN 61000-4-5
Conducted radio-frequency common mode	EN 61000-4-6

Emission tests according to the E/ECE Regulation No. 10, Revision 4 (2012)

Emission test	Test method	Conclusion
Measurement of radiated interference field strength in the frequency range 30 – 1000 MHz	E/ECE Reg. No. 10, Annexes 7 and 8	Pass [1)]
Measurement of conducted disturbances	E/ECE Reg. No. 10, Annex 10	Pass [2)]

[1)] Limit values according to the E/ECE Regulation No. 10, Sections 6.5.2 and 6.6.2.

[2)] Limit values according to the E/ECE Regulation No. 10, section 6.9.1.

Epec Oy reserves all rights for improvements without prior notice

Immunity tests according to the E/ECE Regulation No. 10, Revision 4 (2012)

Immunity test	Test method	Conclusion
Radiated radio-frequency electromagnetic field	E/ECE Reg. No. 10, Annex 9	Pass [1)]
Immunity to transient disturbances conducted along supply lines	E/ECE Reg. No. 10, Annex 10	Pass [2)]

[1)] The requirements defined in the E/ECE Regulation No. 10, section 6.10

[2)] The requirements defined in the E/ECE Regulation No. 10, section 6.8.1.

The following tables provide more detailed descriptions about the performed EMC tests:

Emission tests according to the E/ECE Regulation No. 10, Revision 4 (2012)

Radiated disturbance emission test

Test method E/ECE Reg. No. 10, Annexes 7 and 8, CISPR 25

Frequency (MHz)	Limit value (dBmV/m)
30 – 1000	62/52/63 (Broadband QP)
30 – 1000	52/42/53 (Narrowband AVE)

Conducted disturbances emission test

Test method E/ECE Reg. No. 10, Annex 10, ISO 7637-2: 2004

Port	Limit level (V)
12V DC input	+75
	-100
24V DC input	+150
	- 450

Epec Oy reserves all rights for improvements without prior notice

Immunity tests according to the E/ECE Regulation No. 10, Revision 4 (2012)

Immunity to transient disturbances conducted along supply lines test

Test method E/ECE Reg. No. 10, Annex 10, ISO 7637-2: 2004
Performance criterion:

Pulse	Criterion
1	C
2a	B
2b	C
3a	A
3b	A
4	C
5	C

24 V input, Pulse:

Pulse	Pulse parameters
1	3/2000 µs, -600 V, 5000 pulses
2a	1/50 µs, +112 V, 5000 pulses
2b	20V, 220 ms, 10 pulses
3a	5/100 ns, -300 V, 60 minutes
3b	5/100 ns, +300 V, 60 minutes
4	t_d 100 ms -16 V, 10 s -12V, 10 pulses
5	t_d 350ms, R_i 1 Ω, +70 V 5 pulses

12 V input, Pulse:

Pulse	Pulse parameters
1	1/2000 µs, -150 V, 5000 pulses
2a	1/50 µs, +112 V, 5000 pulses
2b	10V, 220 ms, 10 pulses
3a	5/100 ns, -220 V, 60 minutes
3b	5/100 ns, +150 V, 60 minutes
4	t_d 40 ms -7,0 V, 5 s -6 V, 10 pulses
5	t_d 400ms, R_i 0,5 Ω, +70 V 5 pulses

Immunity of ESAs to electromagnetic radiation

Test method E/ECE Reg. No. 10, Annex 9, ISO 11452-2
Performance criterion: No degradation of 'Immunity-related functions'
Sweep step: 1%, time/step: 3 s

Specification	Frequency Range (MHz)	Test level
Modulation AM80% 1 kHz	20-800	30 V/m (constant peak)
PM 577/4600 µs	800-2000	30 V/m (constant peak)

Epec Oy reserves all rights for improvements without prior notice

Classification of functional status

Class A:
All functions of a device/system perform as designed during and after exposure to disturbance.

Class B:
All functions of a device/system perform as designed during and after exposure to disturbance. However, one or more of them can go beyond specified tolerance. All functions return automatically to within normal limits after exposure is removed. Memory functions shall remain class A.

Class C:
One or more functions of a device/system do not perform as designed during exposure but return automatically to normal operation after exposure is removed.

Class D:
One or more functions of a device/system do not perform as designed during exposure and do not return to normal operation until exposure is removed and a device/system is reset by simple "operator/use" action.

Class E:
One or more functions of a device/system do not perform as designed during exposure and cannot be returned to operation without repairing the device/system.

EN 61000-6-3 (2007) **Electromagnetic compatibility-generic emission standard part 6-3: residential, commercial and light industry**	
Radiated disturbance emission test	• Test method EN 55022, CISPR 16-2-3

Frequency (MHz)	Limit value (dBmV/m)
30 – 1000	30/37 (QP)

Conducted disturbance at main ports emission test	• Test method EN 55022, CISPR 16-2-1

Frequency (MHz)	Limit value (dBmV)
0,15 - 30	66/56/60 (QP)
0,15 – 30	56/46/50 (AVE)

Epec Oy reserves all rights for improvements without prior notice

<table>
<tr><th colspan="2">EN 61000-6-2 (2005)
Electromagnetic compatibility-generic immunity standard
part 6-2: industrial environment</th></tr>
<tr><td>Conducted radio-frequency common mode immunity test</td><td>
Test method EN 61000-4-6
Performance criterion A
<table>
<tr><th>Specification</th><th>Port</th><th>Test level</th></tr>
<tr><td rowspan="2">Frequency range 0,150-80 MHz
Modulation
AM80% 1 kHz
Sweep step 1%, time/step 2s</td><td>DC input port</td><td>10 Vemf</td></tr>
<tr><td>Signal ports</td><td>10 Vemf</td></tr>
</table>
</td></tr>
<tr><td>Radiated radio-frequency electromagnetic field immunity test</td><td>
Test method EN 61000-4-3
Performance criterion A
<table>
<tr><th>Specification</th><th>Range (MHz)</th><th>Test level</th></tr>
<tr><td rowspan="2">Frequency range
80-2700 MHz Modulation
AM 80% 1 kHz
Sweep step 1%, time/step 2 s</td><td>80-2500</td><td>10 V/m</td></tr>
<tr><td>2500-2700</td><td>3 V/m</td></tr>
</table>
</td></tr>
<tr><td>Electrical fast transient (EFT/B) immunity test</td><td>
Test method EN 61000-4-4
Performance criterion B
<table>
<tr><th>Test pulse</th><th>Port</th><th>Test level</th></tr>
<tr><td rowspan="2">5 (Tr) / 50 (Th) ns, repetition frequency 5 kHz, duration 1 minute</td><td>DC input port</td><td>± 2,0 kVp</td></tr>
<tr><td>Signal port</td><td>± 1,0 kVp</td></tr>
</table>
</td></tr>
<tr><td>Electrostatic discharge (ESD) immunity test</td><td>
Test method EN61000-4-2
Performance criterion B
<table>
<tr><th>Discharge mode</th><th>Test level (kVp)</th></tr>
<tr><td>Contact</td><td>± 2, ± 4, ± 6, ± 8</td></tr>
<tr><td>Indirect contact</td><td>± 2, ± 4, ± 6, ± 8</td></tr>
<tr><td>Air</td><td>± 2, ± 6, ± 8, ± 15</td></tr>
</table>
</td></tr>
</table>

Epec Oy reserves all rights for improvements without prior notice

Performance criteria for immunity tests

Performance criterion A:

The EUT shall continue to operate as intended during and after the test. No degradation of performance is allowed.

Performance criterion B:

The EUT shall continue to operate as intended after the test. However, moderate degradation of performance is allowed. No change of actual operating state or loss of memory functions is allowed.

Epec Oy reserves all rights for improvements without prior notice

Epec Oy

Postal address
PL/P.O.Box 194
FIN-60101 Seinäjoki, Finland

Phone
+358-(0)20-7608 111

Internet
www.epec.fi

7.2 Environmental Tests

The following environmental tests have been performed to Epec 3606 control units:

Temperature			
Test	**Temperature**	**Duration/ Exposure time**	**Remarks**
Cold IEC 60068-2-1 (2007-03), Test Ad	-45 ˚C	16 h	1 ˚C/min
Dry heat IEC 60068-2-2 (2007-07), Test Bb	70 ˚C	16 h	1 ˚C/min
Damp heat cycling IEC 60068-2-30 (2005-08), Test Db	+25 ˚C/+55 ˚C		rel. humidity >90% cycle duration 24h six test cycles
Change of temperature IEC 60068-2-14 (2009-01), Test Na	-50 ˚C/+60 ˚C	3 h	change time between extreme temperatures 1-2 min 5 test cycles
Change of temperature IEC 60068-2-14 (2009-01), Test Nb	-40 ˚C/+70 ˚C	3 h	change of temperature 10 ˚C/min 2 test cycles

Mechanical resistance		
Test	**Duration and direction**	**Remark**
Shock test IEC 60068-2-27 (2008-02) Test Ea	pulse duration 6 ms 500 impulses in six directions	half sine pulse shape peak acceleration 500 m/s^2
Shock test IEC 60068-2-27 (2008-02) Test Ea	pulse duration 4 ms 100 impulses in two directions	half sine pulse shape peak acceleration 750 m/s^2 and 1000 m/s^2
Vibration, random IEC 60068-2-64 (2008-04), Test Fh	test duration 60 min in every three test direction	ASD-level 5 m^2/s^3, 10 … 200 Hz ASD-level 1,0 m^2/s^3, 200 … 500 Hz total spectral acceleration 3,54 grms
Vibration, random IEC 60068-2-64 (2008-04), Test Fh	test duration 10 min in one test direction at each level	frequency range 10...500 Hz ASD-level 0,1 g^2/Hz (10,0 m^2/s^3), 10...200 Hz ASD-level 0,02 g^2/Hz (2,0 m^2/s^3), 200...500 Hz, 5,00 grms ASD-level 0,2 g^2/Hz (20,0 m^2/s^3), 10...200 Hz ASD-level 0,04 g^2/Hz (4,0 m^2/s^3), 200...500 Hz, 7,05 grms ASD-level 0,4 g^2/Hz (40,0 m^2/s^3), 10...200 Hz ASD-level 0,08 g^2/Hz (8,0 m^2/s^3), 200...500 Hz, 9,96 grms

Epec Oy reserves all rights for improvements without prior notice

		ASD-level 0,8 g²/Hz (80,0 m²/s³), 10...200 Hz ASD-level 0,16 g²/Hz (16,0 m²/s³), 200...500 Hz, 14,08 grms ASD-level 1,45 g²/Hz (145,0 m²/s³), 10...200 Hz ASD-level 0,29 g²/Hz (29,0 m²/s³), 200...500 Hz, 19,04 grms	
Free fall, IEC 60068-2-31 (2008-05), Test Ec	one fall / direction on each surface and corner	fall height 100 cm	
Corrosion			
Test	**Temperature**	**Duration**	**Concentration**
Salt spray test ISO 9227	+35 °C	24 h	5 % NaCl
Tightness tests for IP67			
Test	**Duration and procedure**	**Remark**	
Dust test for IP6X according to IEC 60529	exposed to the free settling dust for 8 hours underpressure during the test 2 kPa flow rate of the air 0,1 l/min	no deposit of dust noticed inside complies with the requirements stated for the protection class IP6X	
Water test for IPX7 according to IEC 60529	immersion duration 30 minutes immersion depth 1000 mm water temperature +22 °C	no ingress of water noticed inside complies with the requirements stated for the protection class IPX7	

Epec Oy reserves all rights for improvements without prior notice

8 MECHANICS AND CABLING

8.1 Unit Dimensions

Unit dimensions from the top:

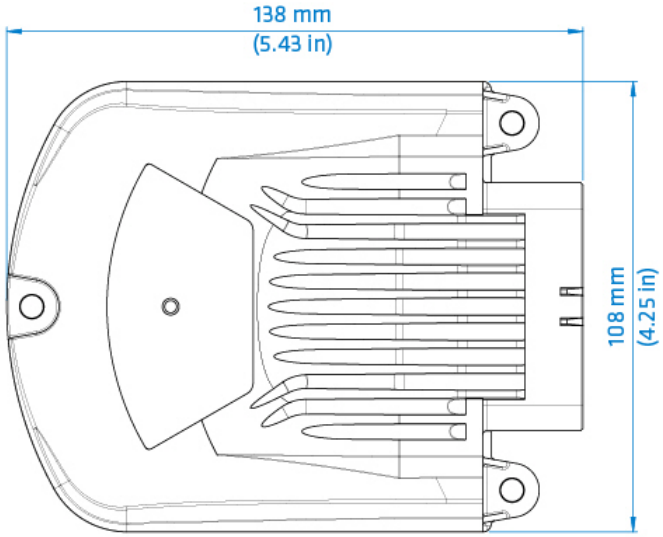

Unit dimensions from the side:

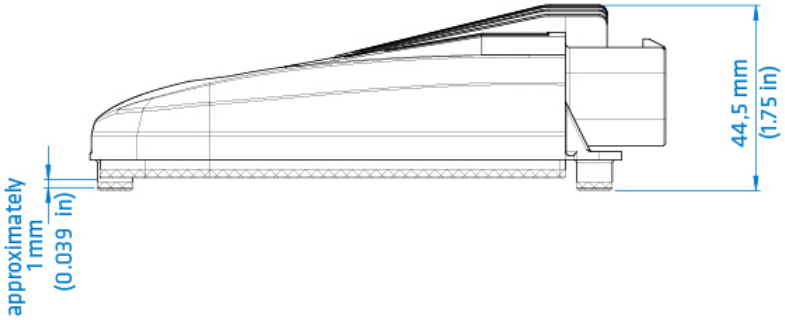

Epec Oy reserves all rights for improvements without prior notice

Fastening hole dimension:

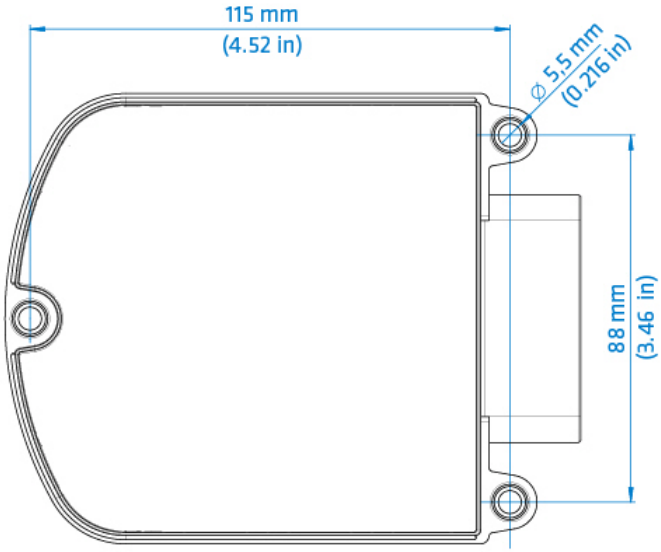

Epec Oy reserves all rights for improvements without prior notice

8.2 Mounting and Cleaning

Control unit mounting location should be planned so that the machine's washing does not damage the unit.



A direct water jet towards the control units should be avoided, especially when using high pressure. Also, the use of any such solvent that causes damage to electronic devices should be avoided when handling the control units.



When cleaning the control unit, do not use highly alkaline / acidic substances, too hot water, or too heavy mechanical abrasion.



In moist conditions, the unit must be mounted and oriented so that the connectors are not filled with water.



If the product's assembly screws or product labels have been removed or damaged or the unit housing has been opened in any way, the warranty becomes null and void.

- The mounting is done with 3 pieces of M5 screws
- It is possible to use a spring washer under the screw head
- Mounting must be done on to a conductive metal base. The control unit's zinc housing must have a galvanic connection to the machine frame
- The paint must be removed from the control unit under each screw head before mounting, to ensure a galvanic connection to the control unit frame. Also, remove the paint from the machine frame, where the control unit will be attached.
- 3-point mounting allows mounting on a slightly uneven surface
- Reserve 10 cm installation space for the connector cables
- Mounting position must be horizontal or vertical to allow water, etc. flowing away from connectors, see the figures below.

Do not mount the unit in a position where the bottom side or the connectors are facing up.

Epec Oy reserves all rights for improvements without prior notice

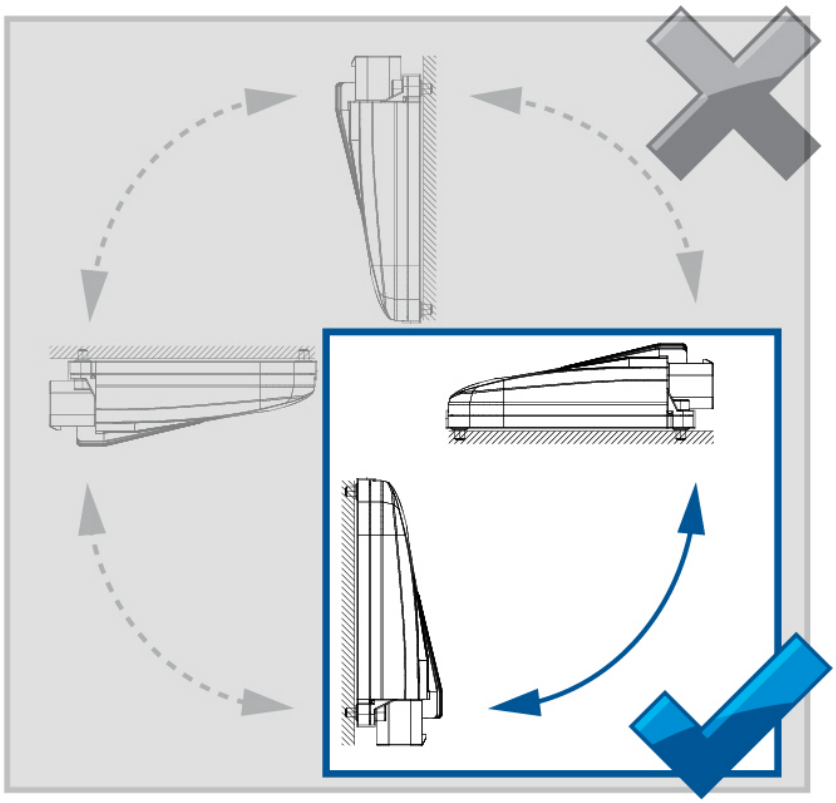

Do not mount the unit in a position where the connector side is facing up.

Epec Oy reserves all rights for improvements without prior notice

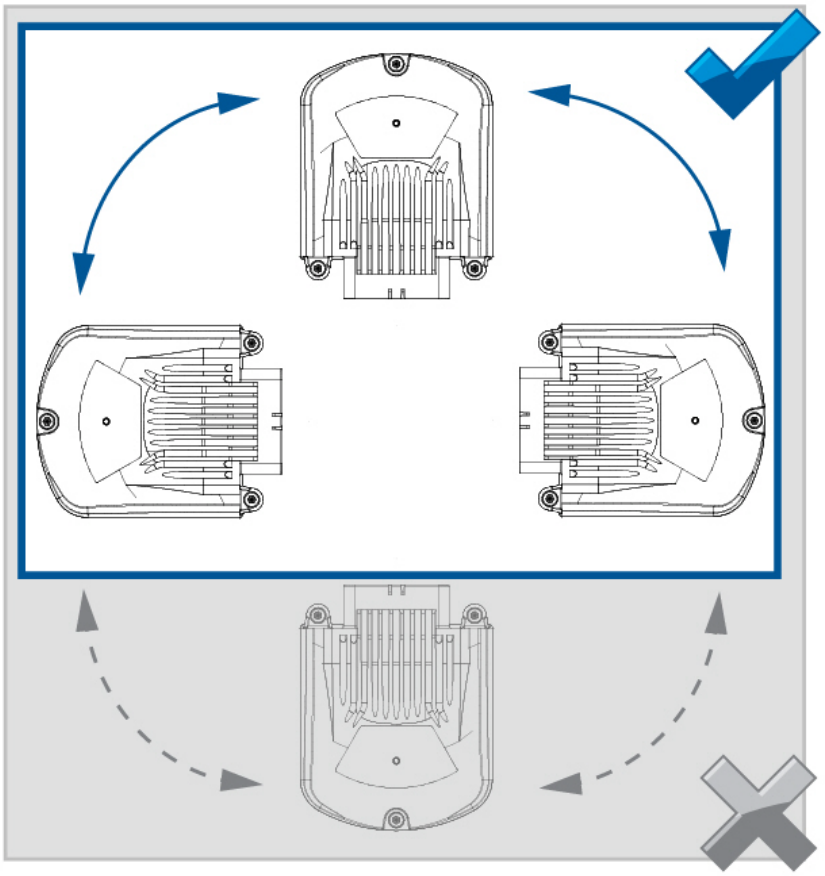

Epec Oy reserves all rights for improvements without prior notice

8.3 Plugging and unplugging the connectors

Epec control units use heavy duty gold plated, locked and sealed AMPSEAL connectors. The following figure shows an example of an AMPSEAL connector:

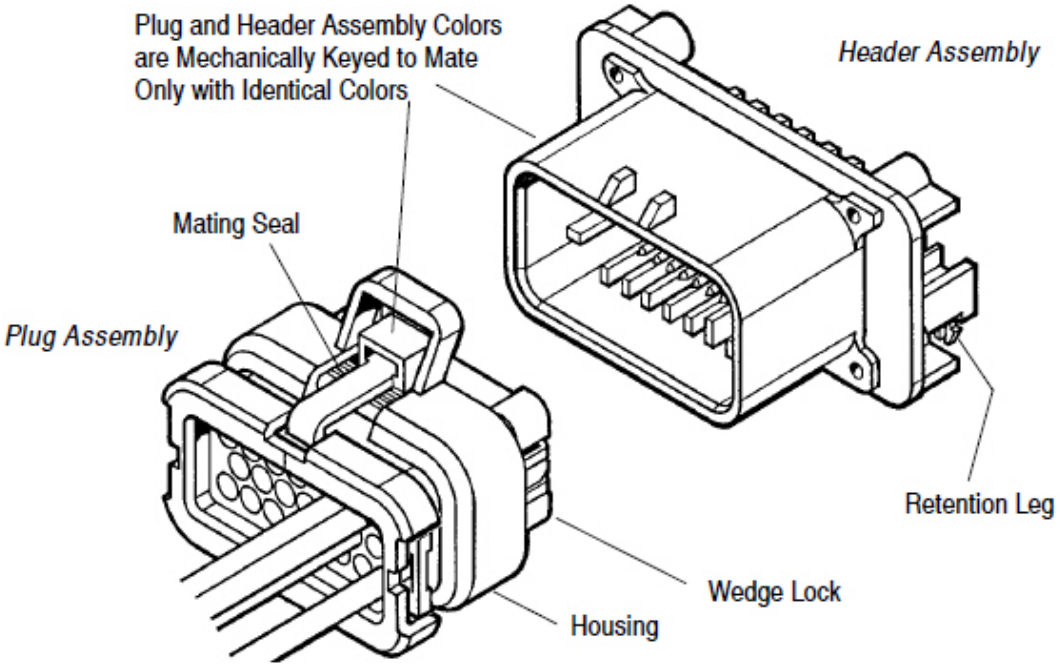

- Gold plated AMPSEAL connectors pack a current of 15 amperes per contact and tolerate operating temperature range.
- All module connectors are mechanically keyed to mate only with identical colors (blue, grey and black).

When connecting, make sure that:

- connectors are pressed down to the bottom and that they are locked
- connectors are clean (avoid moisture or dirt inside the connector)
- unused connectors are covered with empty connectors of the same color (this helps to keep the control unit connectors dry and protected)
- all cables, connectors and tools are of correct type, and sufficiently high quality, and suitable for this kind of use (protection for moisture, mechanical stability, power durability, coupling resistance among other things)
- there is a sufficient margin (slack) left in the cables to prevent the torsion of the connectors
- wires are bound to the control unit cover base knob with cable ties

The following figure describes some general instructions about the connectors.

Epec Oy reserves all rights for improvements without prior notice

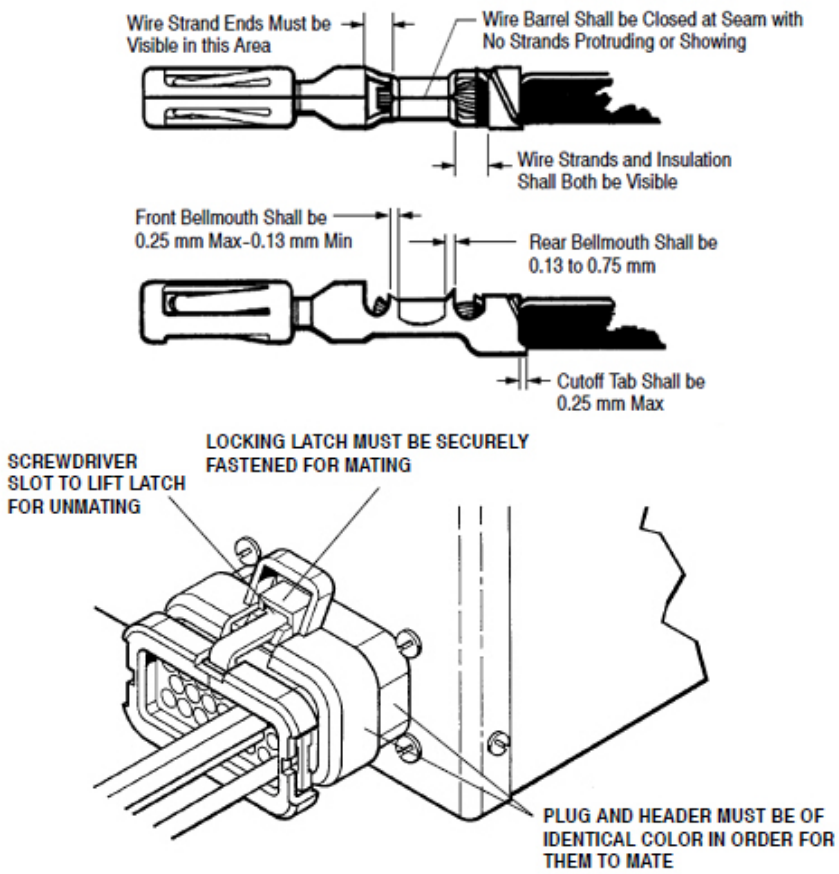

Refer to AMP Application Specification 114-16016 for more detailed information on connectors and cable recommendations.

Ordering codes for the AMPSEAL connectors, crimps and tools are listed in Section *Accessories and Ordering Codes*.

Epec Oy reserves all rights for improvements without prior notice

8.4 Cabling

8.4.1 System Topologies



Generally, cabling should be properly designed and documented to help the initial assembly and maintenance.
It is highly recommended to mark each cable on both ends to avoid confusion and errors.



The cables must be run in a safe route along the machine frame.
When routing cables, avoid interfering objects and pay particular attention to moving parts of the machine.
It is also good to minimize the amount of the connection points of the cable harness to maximize reliability.
Also, all valid safety instructions should be observed when coupling.

- The control units are connected with each other using standardized CAN bus.
- The idea of the Epec embedded control system, is that all the control units are installed close to sensors, encoders and other equipment connected to them.
    - This way the amount of the traffic on the CAN bus is minimized and connections can be made using short wires.

Termination resistors

- Generally, the bus cable is terminated at both ends with termination resistors (ISO 11898:1993).
    - In CAN1, termination resistor can be connected internally as shown in the figure Example1 below



The cable lengths presented here are approximates. Actual cable lengths also depend on the cable quality, the cable type and also on the machine environment (possible interference).

Epec Oy reserves all rights for improvements without prior notice

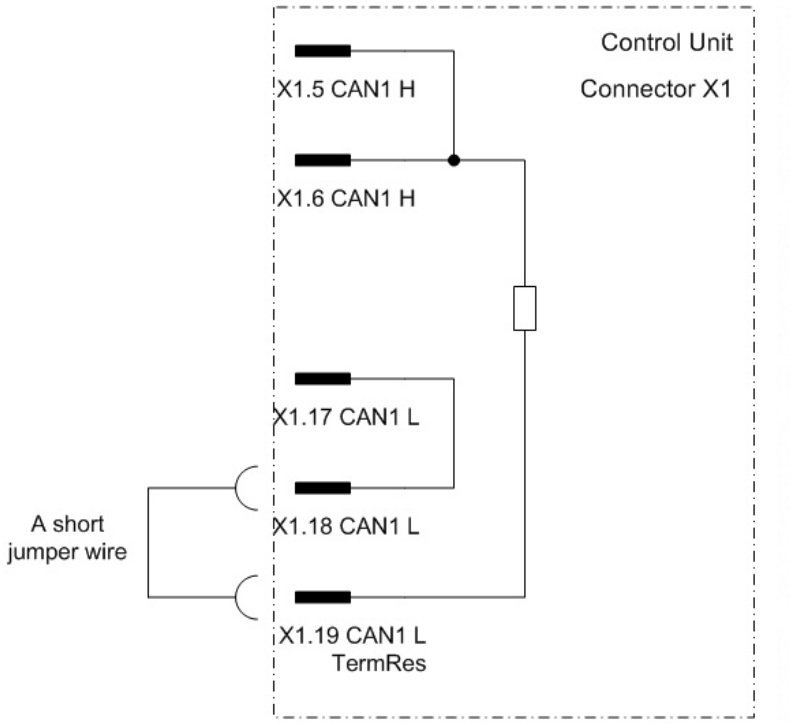

Example1. Internal termination resistor connection in CAN1 (the resistor is typically 120 Ω)

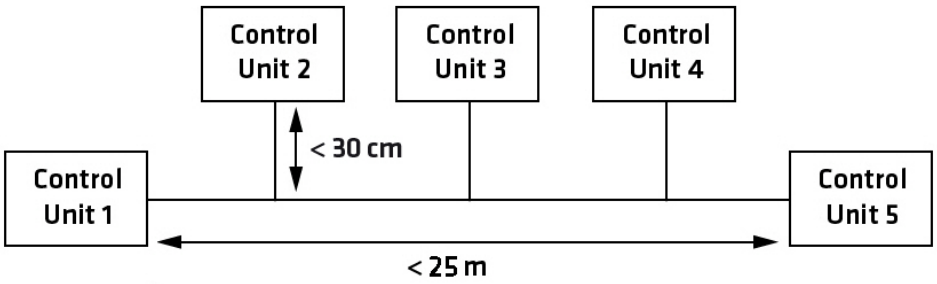

Example 2. Control system topology in theory with maximum bus speed (1000 kbit/s); Control Units in traditional bus arrangement. For more information about the bus speeds, refer to CiA DS-102 standard.

Epec Oy reserves all rights for improvements without prior notice

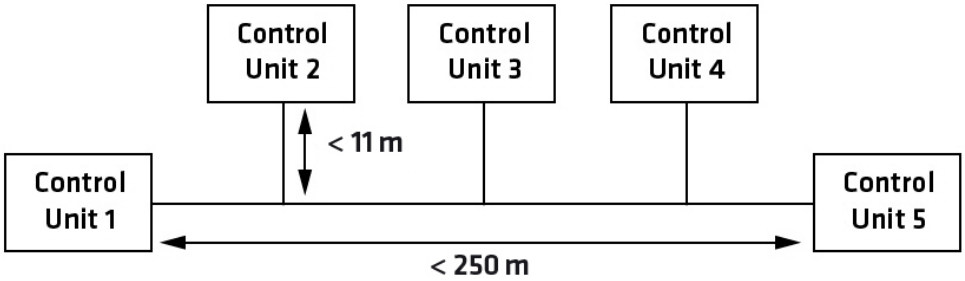

Example 3. Control system topology in theory with 250 kbit/s bus speed; Control Units in traditional bus arrangement. For more information about the bus speeds, refer to CiA DS-102 standard.

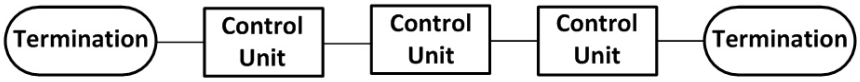

Example 4. The usage of the termination resistor (TR) in a conventional bus. The maximum recommended bus length is directly dependent on the bus speed.
In theory, the maximum length with the maximum speed can be up to 25 meters. If the bus speed is lower, the length can be extended.
The maximum length of the bus depends on the bus speed. For more information about the bus speeds, see the table below / refer to CiA DS-102 standard.

The following table shows some baud rates in general purpose CAN bus networks as well as the maximum bus length for a given baud rate, that CAN in Automation (CiA) international users and manufacturers group has recommended to be used. For more information, refer to CiA DS-102 standard.

Epec Oy reserves all rights for improvements without prior notice

CAN bus baud rates and bus lengths according to CiA DS-102 standard

Baudrate	Bus length
1 Mbits/s	25 m
800 kbits/s	50 m
500 kbits/s	100 m
250 kbits/s	250 m
125 kbits/s	500 m
50 kbits/s	1000 m

Epec Oy reserves all rights for improvements without prior notice

Epec Oy

Postal address
PL/P.O.Box 194
FIN-60101 Seinäjoki, Finland

Phone
+358-(0)20-7608 111

Internet
www.epec.fi

8.4.2 CAN Bus Cabling

The CAN bus cable is the neural backbone of the whole system and should be designed and constructed with extra care.

- The control unit's CAN1 is equipped with double pins that enables cabling without branching the wire harness.
- For information about the CAN bus lengths and baud rates, refer to section *System Topologies*.

Cable

- It is recommended to use high quality and twisted (approx. 1 round / 1 inch) CAN bus cable.
- Normal UTP (Unshielded Twisted Pairs) cable is well suited for distances under approximately 10 meters.
- In longer distances, and especially if there is possibility for electromagnetic interference, it is highly recommended to use shielded and twisted cable for CAN bus, also for shorter distances.
- To avoid electromagnetic interference (EMI), locate the bus cable as far away from high-current carrying cables as possible. Generally, the amount of the connections and connectors should be minimized to maximize security; also all connections should be done carefully.
- The shield grounding must be done only in one end of the cable

Cable shield

Connection example when there is a GND pin available in the control unit:

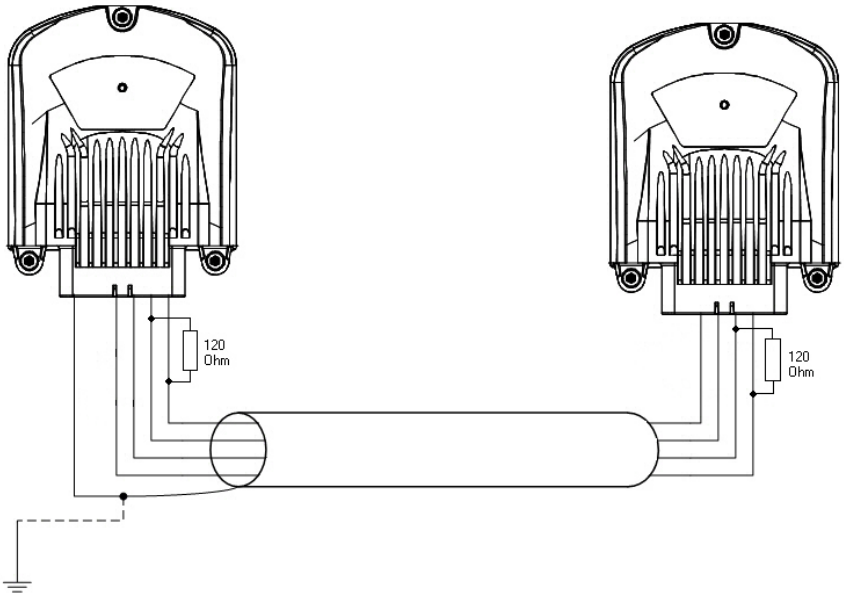

Epec Oy reserves all rights for improvements without prior notice

Connection example when there is not a GND pin available in the control unit:

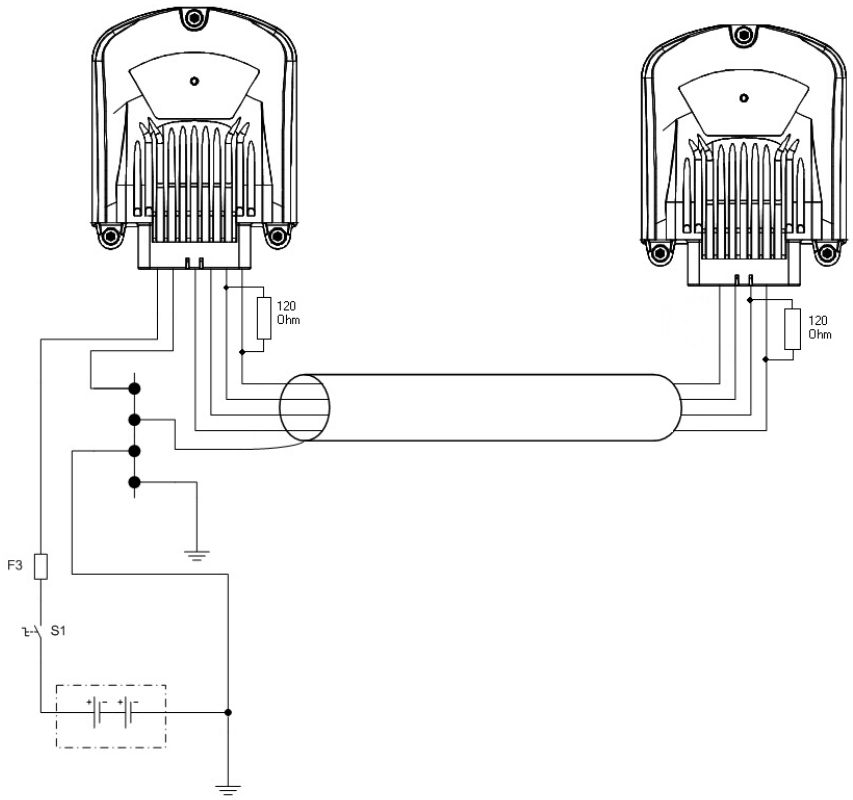

Epec Oy reserves all rights for improvements without prior notice

8.4.3 I/O Cabling

Closed circuit loops are always recommended and mandatory when you are using DO or PWM pin as an input.
Closed circuit loop means that the current from the control unit to the sensor must return to the same control unit, see the figures below.

To ensure correct measurement, reserve separate GND pin(s) for AI pin(s) and don't use it/them for any other purposes. See cabling example below.

- The cabling for encoders etc. is in many cases supplied together with them.
- In many cases, very simple basic cable may be used, e.g. automobile R2 cable (0,5 or 1,0) by NK Cables.
- Dimensions of the cable should be appropriate for AMP contacts (so that crimping is possible).
  - Refer to AMPSEAL table (in section *Accessories and Ordering Codes*) for dimensions.
  - Take extra care for protecting the cables against physical wear and damage.
- Only one wire can be connected to one AMPSEAL connector pin. However, if more than one wire has to be connected to one connector pin, it has to be connected by branch wiring.
- Some voltage inputs use relatively low voltages.
  - Consider using shielded cables for these encoders etc. especially for longer distances to increase safety
- Using shielded cable is recommended also in joystick connections.

The following figure describes the closed loop wiring:

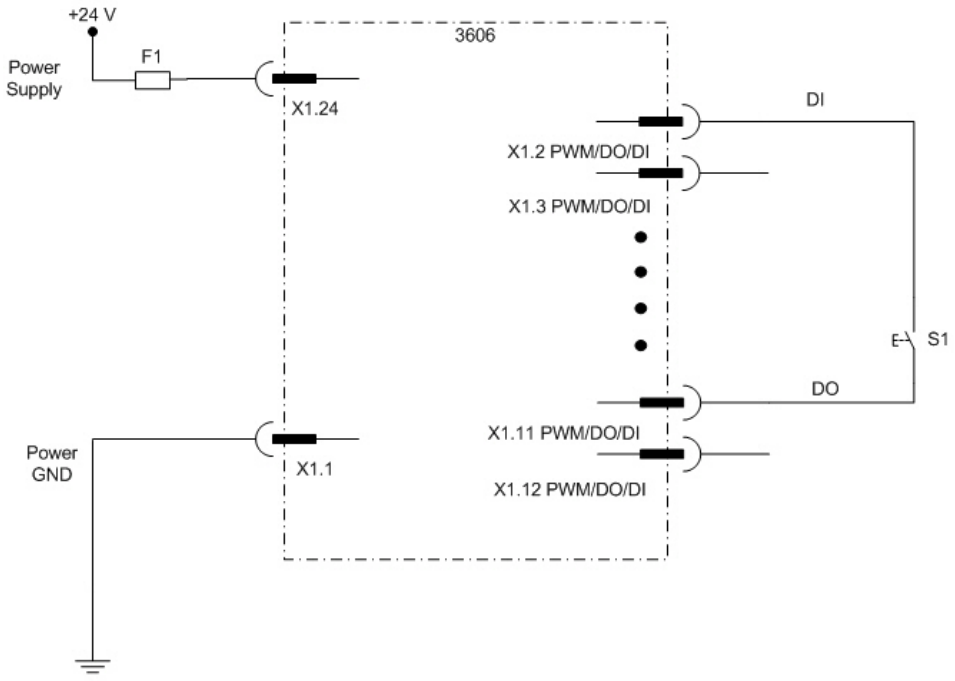

Epec Oy reserves all rights for improvements without prior notice

Do not connect the closed circuit loop as shown in the following figure:

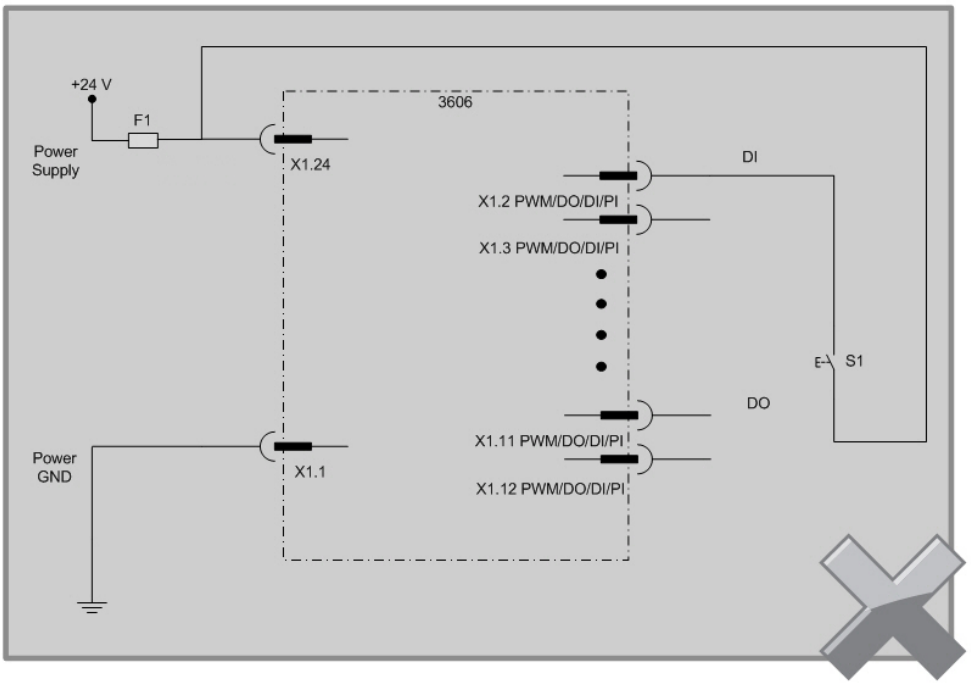

The following figure describes four different ways to connect closed circuit loop through the control unit:

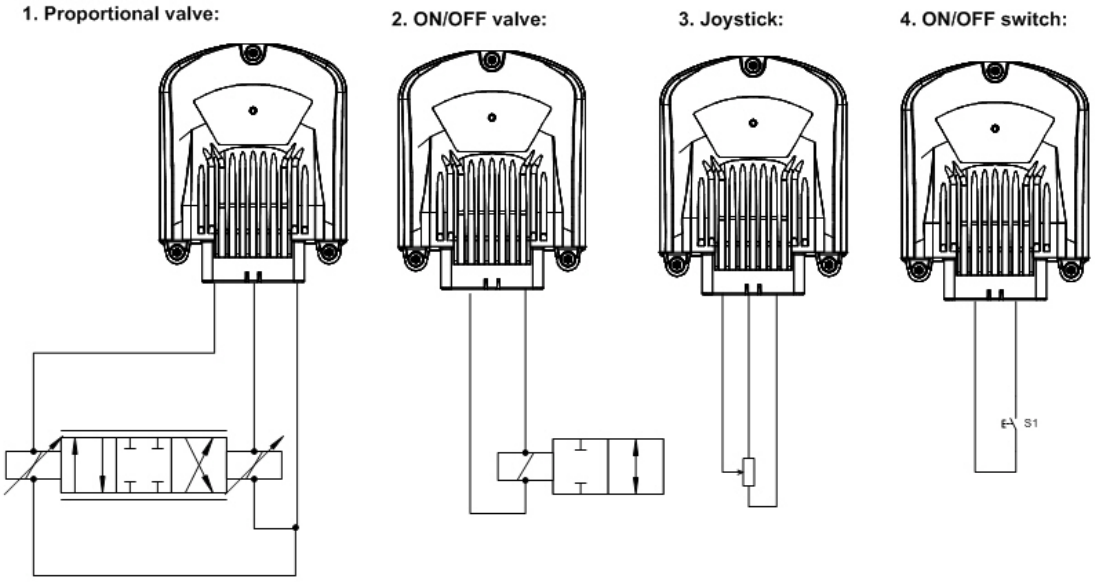

Epec Oy reserves all rights for improvements without prior notice

The following figure describes three different ways to connect open circuit loop (from the control unit's point of view):

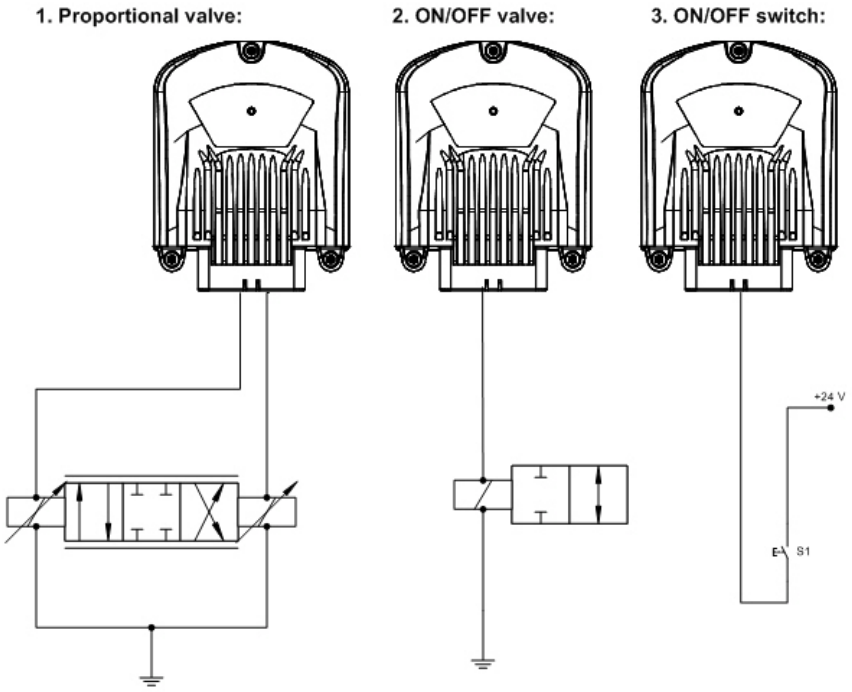

AI - GND cabling examples (use separate GND pin for AI pins):

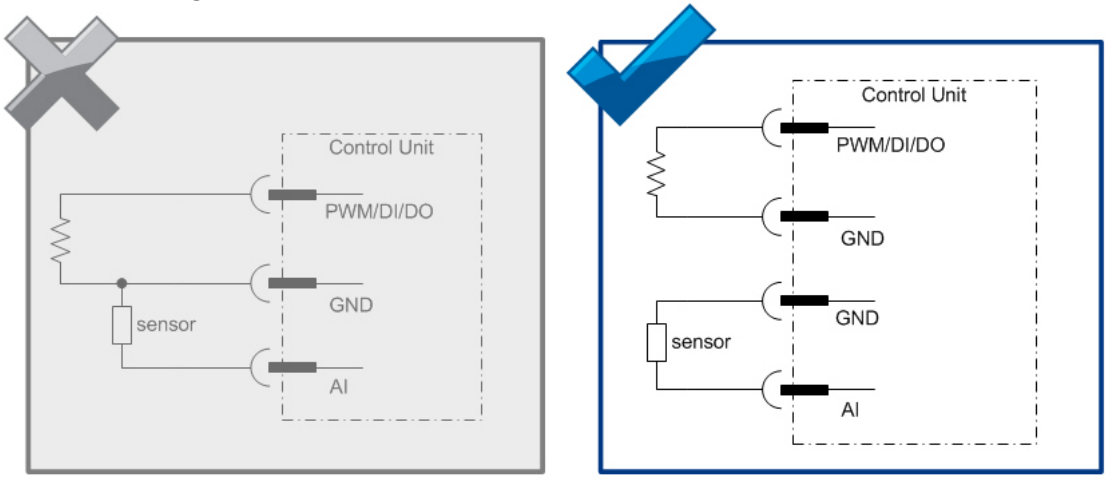

- sensors and encoders must be wired according to the closed-loop principle, i.e. the power for the sensors and encoders is supplied by the control unit they are connected to. This way, it is possible to avoid potential harmful differences, so the MOSFET driven output power switching operates properly.

When designing the sensor and encoder connections, observe single-point grounding. All Each control unit connector has several GND pins which should be used.

Refer to section *Power supply* for accurate pin allocation of connectors.

Epec Oy reserves all rights for improvements without prior notice

8.4.4 Power Supply Cabling

The maximum continuous current per pin is 10 A.

The power for sensors, encoders and other equipment should be supplied from the very same unit that the equipment is connected to, to ensure the best performance of the system. No external power (or ground) connections are allowed.

- The nominal operating voltage for Epec control units is 12 and 24 VDC. The full operating range is 8,5 - 33 VDC.
- See section *Power Supply* for accurate pin allocation of the connectors when using Epec 3606 control unit.
- Single point grounding should be used for power supply for all the control units.

Power supply's wiring example:

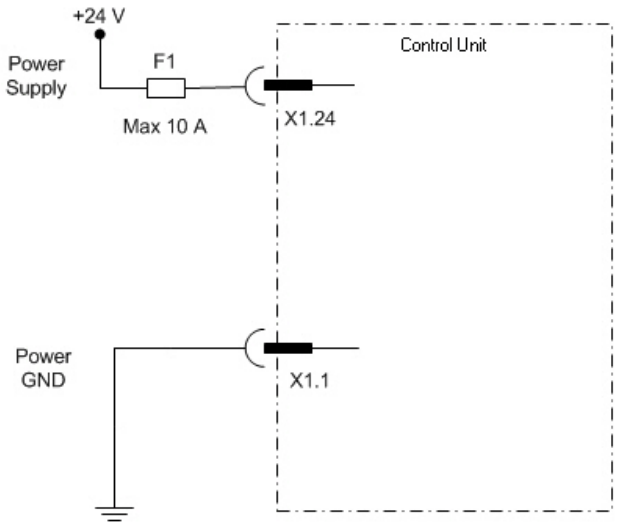

Epec Oy reserves all rights for improvements without prior notice

Power supply's wiring:

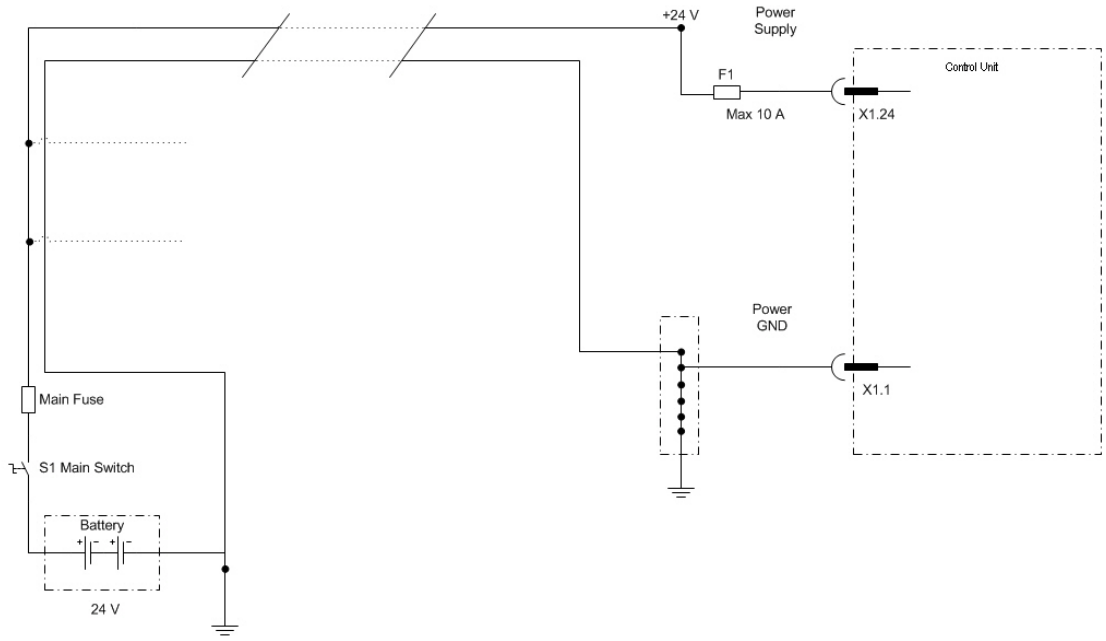

8.4.4.1 Emergency Stop

In all European Community countries, the emergency stop should be implemented in accordance with standard EN ISO 13850, which complies to the EC Machinery directive 2006/42/EC. In other countries, the emergency stop should be implemented according to local standards and/or to local legislation.

Epec Oy reserves all rights for improvements without prior notice

8.5 Welding



Welding causes some high current flows and voltage peaks in the machine. It should be noted that the electronics of the control system may be damaged, if the welding current can get through the control unit itself. So, when welding, it should be taken care to prevent high currents from going through the control units or through the CAN bus.

Follow carefully the following instructions.



Disconnect all the connectors from the control units before welding.



Generally, even if the control system power is disconnected, welding should be done carefully and by following appropriate safety measures. Welding grounding should be connected close to the welding point to avoid long distance high current flow through machine frame.

Epec Oy reserves all rights for improvements without prior notice

8.6 System Examples

Loading machine

Cabin control unit

- reads the joysticks and switches
- controls the boom and bucket
- controls the gearing
- controls the steering and brakes
- controls the lights

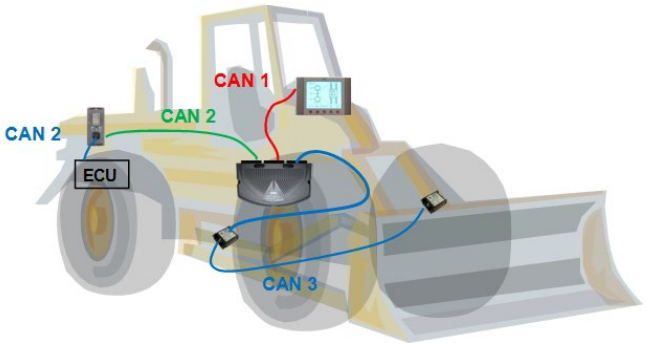

Rear frame control unit

- controls the engine
- controls the hydraulic pumps
- controls the rear lights

Tilt sensors

- measures the frame position
- measures the loader position

Display

- gauge
- diagnostics
- software updating

Dumper

Cabin control unit

- reads the joysticks and switches
- controls the engine
- controls the gearing
- controls the driveshaft brake
- controls the steering and brakes
- controls the dump box

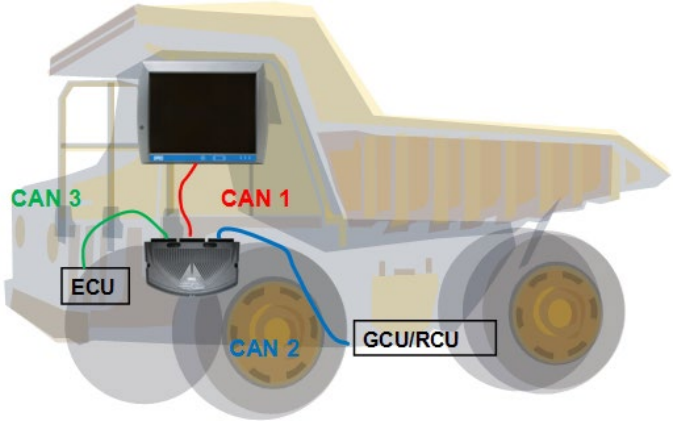

Display

- remote connection
- positioning
- gauge
- diagnostics
- software updating

Epec Oy reserves all rights for improvements without prior notice

Landfill compactor

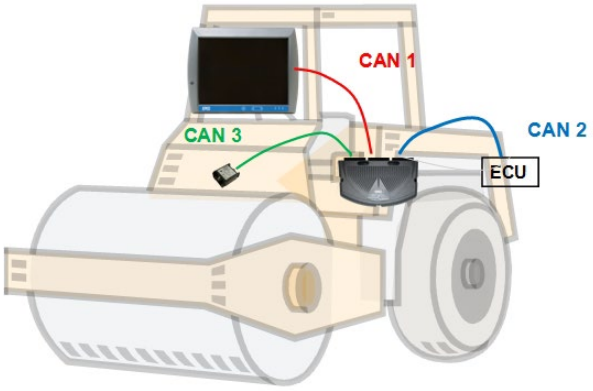

Cabin control unit
- reads the joysticks and switches
- controls the engine
- controls the transmission
- controls the steering
- controls the lights

Tamping sensors
- measures the degree of concentration

Display
- remote connection
- positioning
- gauge
- diagnostics
- software updating

Backhoe

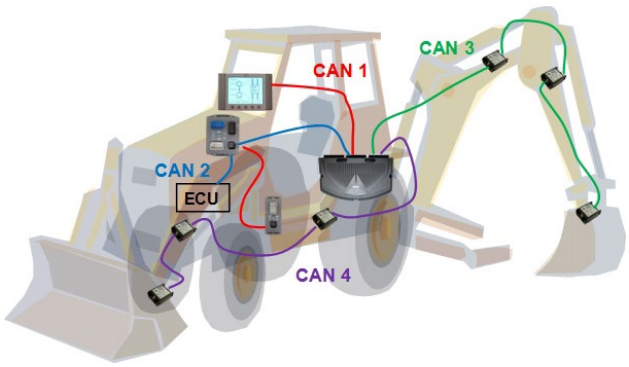

Cabin control unit
- reads the joysticks and switches
- controls the excavator
- controls the roof lights
- booms' position calculation

Engine control unit
- controls the engine
- controls the front loader
- reads the fluid pressures and temperatures

Gearing control unit
- controls the gearing
- controls the suspension

Tilt sensors
- measures the frame position
- measures the excavator and front loader positions

Display
- gauge
- diagnostics
- software updating

Epec Oy reserves all rights for improvements without prior notice

8.7 Accessories and Ordering Codes

Related products

Product	Epec ordering code	Epec data sheet code
Measuring adapter	E3003510	MAN000512
CAN adapter	E3003509	MAN000513

AMPSEAL Connectors

Epec uses gold plated, locked and sealed AMPSEAL heavy duty connectors for all Epec CAN Control Unit Family products to ensure endurance under extreme conditions.

- All connectors are mechanically keyed to mate only with identical colors

AMPSEAL product	TE Connectivity ordering code	Epec ordering code
AMP 35 pin grey plug (female)	776164-4	KX0351
AMP35 FEM (grey) - flying leads (2m)		E30902451
Power supply & CAN cable for 3000, 4000 and 5000 series control units (2 m, AMP35 - AMP8 (Power & 2 x CAN), 29 x flying leads (other I/O pins))		E30902491
Contact for AMP plug assembly	770854-3	KX0010
Crimping tool	58529-1	TT0018
Wire relief for a connector	776463-1	KX0354

AMPSEAL cable dimensions

Size		Insulation diameter range	Strip length ±0,4
mm²	AWG		AWG
0,5	20	1,7 to 2,7	5,1
0,8	18		
1,4	16		
1,5	---	2,2 to 2,4	

Typical hand crimping tool e.g.: AMP Procrimper 58529-1 (TE Connectivity), Epec ordering code TT0018

Epec Oy reserves all rights for improvements without prior notice